SERVICE MANUAL

DC Inverter

Wall mounted Type R-Series

HSU-09H03/R(DB)

HSU-12H03/R(DB)

Haier
Inspired living

splitoff.ru

Большая библиотека технической документации
https://splitsystema48.ru/instrukcii-po-ekspluatacii-kondicionerov.html
каталоги, инструкции, сервисные мануалы, схемы.

Table of Contents

1. Introduction.....1
2. List of Functions.....6
3. Specifications.....7
4. Printed Circuit Board Connector Wiring Diagram.....9
4.1 Indoor Unit.....9
4.2 Outdoor Unit.....11
5. Functions and Control.....13
5.1 Main functions and Control Specification of indoor unit..... 13
5.2 Main functions and Control Specification of outdoor unit 20
5.3Function of Thermistor 24
5.4 Value of Thermistor 25
6. System Configuration..... 42
6.1 System Configuration..... 42
6.2 Instruction..... 43
7. Service Diagnosis..... 69
7.1 Caution for Diagnosis..... 69
7.2 Problem Symptoms and Measures..... 70
7.3 Service Check Function..... 71
7.4 Troubleshooting..... 73
8. Installations..... 87
9. Removal Procedure..... 95
9.1 Removal of Air Filter..... 95
9.2 Removal of Front Grille..... 97

Все каталоги и инструкции здесь: https://splitsystema48.ru/instrukcii-po-ekspluatacii-kondicionerov.html

9.3 Removal of Assembly of Front Panel Mechanism……..……..99

9.4 Removal of Horizontal Blade……102

9.5 Removal of Drain pan……..……104

9.6 Removal of Vertical Blades and Swing Motor……105

9.7 Removal of Electrical Box……..……107

9.8 Removal of Heat Exchanger ……...109

9.9 Removal of Fan Rotor and Fan Motor……..…… 111

9.10 Removal of outdoor unit panel……..……..……..….....114

9.11 Removal of Electrical Box ……..……118

9.12 Removal of Fan Rotor and Fan Motor……..……119

9.13 Removal of Baffle and Motor bracket……120

9.14 Removal of Heat Exchanger and Compressor ……...122

10. Appendix…… 124

10.1 Piping Diagrams…… 124

10.2 Wiring Diagrams…… 125

10.3 Circuit Diagrams…… 126

Все каталоги и инструкции здесь: https://splitsystema48.ru/instrukcii-po-ekspluatacii-kondicionerov.html

1. Introduction

1.1 Safety Cautions

Be sure to read the following safety cautions before conducting repair work.

The caution items are classified into “Warning” and “Caution”. The “Warning” items are especially important since they can lead to death or serious injury if they are not followed closely. The “Caution” items can also lead to serious accidents under some conditions if they are not followed. Therefore, be sure to observe all the safety caution items described below.

About the pictograms

△ This symbol indicates an item for which caution must be exercised.
The pictogram shows the item to which attention must be paid.

○ This symbol indicates a prohibited action.
The prohibited item or action is shown inside or near the symbol.

● This symbol indicates an action that must be taken, or an instruction.
The instruction is shown inside or near the symbol.

After the repair work is complete, be sure to conduct a test operation to ensure that the equipment operates normally, and explain the cautions for operating the product to the customer.

1.1.1 Caution in Repair

Warning	
Be sure to disconnect the power cable plug from the plug socket before disassembling the equipment for a repair. Working on the equipment that is connected to a power supply can cause an electrical shook. If it is necessary to supply power to the equipment to conduct the repair or inspecting the circuits, do not touch any electrically charged sections of the equipment.	
If the refrigerant gas discharges during the repair work, do not touch the discharging refrigerant gas.The refrigerant gas can cause frostbite.	
When disconnecting the suction or discharge pipe of the compressor at the welded section, release the refrigerant gas completely at a well-ventilated place first. If there is a gas remaining inside the compressor, the refrigerant gas or refrigerating machine oil discharges when the pipe is disconnected, and it can cause injury.	
If the refrigerant gas leaks during the repair work, ventilate the area. The refrigerant gas can generate toxic gases when it contacts flames.	
The step-up capacitor supplies high-voltage electricity to the electrical components of the outdoor unit. Be sure to discharge the capacitor completely before conducting repair work.A charged capacitor can cause an electrical shock.	
Do not start or stop the air conditioner operation by plugging or unplugging the power cable plug. Plugging or unplugging the power cable plug to operate the equipment can cause an electrical shock or fire.	

Все каталоги и инструкции здесь: https://splitsystema48.ru/instrukcii-po-ekspluatacii-kondicionerov.html

Warning	
Be sure to use an exclusive power circuit for the equipment, and follow the technical standards related to the electrical equipment, the internal wiring regulations and the instruction manual for installation when conducting electrical work. Insufficient power circuit capacity and improper electrical work can cause an electrical shock or fire.	
Be sure to use the specified cable to connect between the indoor and outdoor units. Make the connections securely and route the cable properly so that there is no force pulling the cable at the connection terminals. Improper connections can cause excessive heat generation or fire.	
When connecting the cable between the indoor and outdoor units, make sure that the terminal cover does not lift off or dismount because of the cable. If the cover is not mounted properly, the terminal connection section can cause an electrical shock, excessive heat generation or fire.	
Do not damage or modify the power cable. Damaged or modified power cable can cause an electrical shock or fire. Placing heavy items on the power cable, and heating or pulling the power cable can damage the cable.	
Do not mix air or gas other than the specified refrigerant (R-410A / R22) in the refrigerant system. If air enters the refrigerating system, an excessively high pressure results, causing equipment damage and injury.	
If the refrigerant gas leaks, be sure to locate the leak and repair it before charging the refrigerant. After charging refrigerant, make sure that there is no refrigerant leak. If the leak cannot be located and the repair work must be stopped, be sure to perform pump-down and close the service valve, to prevent the refrigerant gas from leaking into the room. The refrigerant gas itself is harmless, but it can generate toxic gases when it contacts flames, such as fan and other heaters, stoves and ranges.	
When replacing the coin battery in the remote controller, be sure to disposed of the old battery to prevent children from swallowing it. If a child swallows the coin battery, see a doctor immediately.	

Caution	
Installation of a leakage breaker is necessary in some cases depending on the conditions of the installation site, to prevent electrical shocks.	
Do not install the equipment in a place where there is a possibility of combustible gas leaks. If a combustible gas leaks and remains around the unit, it can cause a fire.	
Be sure to install the packing and seal on the installation frame properly. If the packing and seal are not installed properly, water can enter the room and wet the furniture and floor.	For integral units only

Все каталоги и инструкции здесь: https://splitsystema48.ru/instrukcii-po-ekspluatacii-kondicionerov.html

1.1.3 Inspection after Repair

Warning	
Check to make sure that the power cable plug is not dirty or loose, then insert the plug into a power outlet all the way. If the plug has dust or loose connection, it can cause an electrical shock or fire.	
If the power cable and lead wires have scratches or deteriorated, be sure to replace them. Damaged cable and wires can cause an electrical shock, excessive heat generation or fire.	

Warning	
Do not use a joined power cable or extension cable, or share the same power outlet with other electrical appliances, since it can cause an electrical shock, excessive heat generation or fire.	

Caution	
Check to see if the parts and wires are mounted and connected properly, and if the connections at the soldered or crimped terminals are secure. Improper installation and connections can cause excessive heat generation, fire or an electrical shock.	
If the installation platform or frame has corroded, replace it. Corroded installation platform or frame can cause the unit to fall, resulting in injury.	
Check the grounding, and repair it if the equipment is not properly grounded. Improper grounding can cause an electrical shock.	
Be sure to measure the insulation resistance after the repair, and make sure that the resistance is 1 M ohm or higher. Faulty insulation can cause an electrical shock.	
Be sure to check the drainage of the indoor unit after the repair. Faulty drainage can cause the water to enter the room and wet the furniture and floor.	

Все каталоги и инструкции здесь: https://splitsystema48.ru/instrukcii-po-ekspluatacii-kondicionerov.html

1.1.4 Using Icons

Icons are used to attract the attention of the reader to specific information. The meaning of each icon is described in the table below:

1.1.5 Using Icons List

Icon	Type of Information	Description
Note:	Note	A “note” provides information that is not indispensable, but may nevertheless be valuable to the reader, such as tips and tricks.
Caution	Caution	A “caution” is used when there is danger that the reader, through incorrect manipulation, may damage equipment, loose data, get an unexpected result or has to restart (part of) a procedure.
Warning	Warning	A “warning” is used when there is danger of personal injury.
	Reference	A “reference” guides the reader to other places in this binder or in this manual, where he/she will find additional information on a specific topic.

Все каталоги и инструкции здесь: https://splitsystema48.ru/instrukcii-po-ekspluatacii-kondicionerov.html

Warning	
Do not repair the electrical components with wet hands. Working on the equipment with wet hands can cause an electrical shock.	
Do not clean the air conditioner by splashing water. Washing the unit with water can cause an electrical shock.	
Be sure to provide the grounding when repairing the equipment in a humid or wet place, to avoid electrical shocks.	
Be sure to turn off the power switch and unplug the power cable when cleaning the equipment. The internal fan rotates at a high speed, and cause injury.	
Do not tilt the unit when removing it. The water inside the unit can spill and wet the furniture and floor.	
Be sure to check that the refrigerating cycle section has cooled down sufficiently before conducting repair work. Working on the unit when the refrigerating cycle section is hot can cause burns.	
Use the welder in a well-ventilated place. Using the welder in an enclosed room can cause oxygen deficiency.	

1.1.2 Cautions Regarding Products after Repair

Warning	
Be sure to use parts listed in the service parts list of the applicable model and appropriate tools to conduct repair work. Never attempt to modify the equipment. The use of inappropriate parts or tools can cause an electrical shock, excessive heat generation or fire.	
When relocating the equipment, make sure that the new installation site has sufficient strength to withstand the weight of the equipment. If the installation site does not have sufficient strength and if the installation work is not conducted securely, the equipment can fall and cause injury.	
Be sure to install the product correctly by using the provided standard installation frame. Incorrect use of the installation frame and improper installation can cause the equipment to fall, resulting in injury.	For integral units only
Be sure to install the product securely in the installation frame mounted on a window frame. If the unit is not securely mounted, it can fall and cause injury.	For integral units only

Все каталоги и инструкции здесь: https://splitsystema48.ru/instrukcii-po-ekspluatacii-kondicionerov.html

2. List of Functions

Category	Functions	HSU-09H03/R(DB)	HSU-12H03/R(DB)
Healthy negative ion	make your room full of an abundance natural negative ions.	Y	Y
Left&right flow	With specialized motor and flaps, the airflow can be adjusted .	Y	Y
DRY function	Make dehumidifying in the room when the unit is working in the "DRY" mode	Y	Y
Child lock	Avoid the child's wrong operation on the remote controller	Y	Y
3D air flow	The 3D airflow is able to deliver the airflow horizontally and vertically.	Y	Y
24Hour timer	Use the timer function to set on,or off,or from on to off,or from off to on	Y	Y
Auto restart	automatic return to previous operation conditions after asundden power blackout	Y	Y
Easy clean design	The panel is easy to wash and the airflow vents can be detached easily	Y	Y
Intelligent air	With twin-blade technology ,the airflow can be adjusted not to blow directly	Y	Y
Anti-mold filter	Catches most small particles and remove unpleasant odors effectively.	Y	Y
Sleep mode	The setting temprature and the indoor noise can be adjusted to a more comfortable level when you set the "sleep mode"during night sleep	Y	Y
O2 refresh	bring fresh air in and take unpleasant air out without tempreture and humidity loss	N	N
4 Fan setting	Slect the fan speed LO,MED,HI,AUTO	Y	Y
Entire auto mode	You can set a tempreture value,with which the unit can be adjusted the operation mode automatically	Y	Y
O2 fresh	It can bring the fresh air in when the machine is running in O2 fresh mode.	N	N
Healthy UV ray	UV ray generator can eliminate and prevent bacteria in air effectively	N	N
Bacteria-killing medium	3-in-1 effect:Anti-Allergen , Anti-Bactetia	N	N
AIP	Purify the room by producing high voltage electric filed to absorb dusts	Y	Y
VC layer	Release Vitamin C to keep health to the skin expecially.	N	N
Auto mode	adjust the last fixed operation mode automatically.	Y	Y
ESF filter	Trap harmful dust and remove unpleasant odors effectively	N	N
Power mode	Quick cooling or heating	Y	Y
Soft mode	lower noise operation condition	Y	Y
Negative ion filter	Generate negative ions by the filter.	Y	Y
Constant temperature dehumidification	Make dehumidifying in the room while keeping the constant temperature inside	Y	Y
Photocatalyst filter	Eminiates the air of a wide variety of odor-causing substances from cigarette smoke particles to chemical vapors	N	N

Note: Y: Holding Functions

N: No Functions

Все каталоги и инструкции здесь: https://splitsystema48.ru/instrukcii-po-ekspluatacii-kondicionerov.html

3. Specifications

Model			HSU-09H03/R(DB)		HSU-12H03/R(DB)	
			Cooling	Heating	Cooling	Heating
Capacity Rated (Min.~Max.)		kW	2.8 (0.5~3.4)	3.6 (0.5~4.9)	3.5 (0.5~4.1)	4.2 (0.5~5.3)
		Btu/h	9，550	11,600	11940	14300
		kcal/h	2，400	2,920	3100	3610
Moisture Removal		L/h	1.2	—	1.2	—
Running Current (Rated)		A	3.3	4.4	4.4	5.3
Power Consumption Rated (Min.~Max.)		W	650 (130~1，100)	880 (130~1,400)	880 (140~1，300)	1050 (130~1,500)
Power Factor		%	92	92	92	92
COP Rated (Min.~Max.)		W/W	4.31 (3.85~3.09)	4.09(3.85~3.5)	3.98(3.5~3.15)	4.0(3.85~3.53)
Piping Connections	Liquid	mm	φ 6.35		φ 6.35	
	Gas	mm	φ 9.52		φ 12.7	
	Drain	mm	φ16.0		φ16.0	
Heat Insulation			Both Liquid and Gas Pipes		Both Liquid and Gas Pipes	
Max. Interunit Piping Length		m	20		20	
Max. Interunit Height Difference		m	10		10	
Chargeless		m	10		10	
Amount of Additional Charge of Refrigerant		g/m	16		16	
Indoor Unit						
Front Panel Color			Mat Crystal White		Mat Crystal Silver	
Air Flow Rate	m³/min	H	12.5	11.7	13	12.5
		M	9.0	8.5	9.5	9.0
		L	6.5	6.5	6.5	6.5
		SL	5.5	5.5	5.5	5.5
Fan	Type		Cross Flow Fan		Cross Flow Fan	
	Motor Output	W	18		18	
	Speed	Steps	5 Steps, Silent, Auto		5 Steps, Silent, Auto	
Air Direction Control			Right, Left, Horizontal, Downward		Right, Left, Horizontal, Downward	
Air Filter			Removable / Washable / Mildew Proof		Removable / Washable / Mildew Proof	
Running Current (Rated)		A	0.14	0.14	0.14	0.14
Power Consumption (Rated)		W	16	16	16	16
Power Factor		%	93.2	93.2	93.2	93.2
Temperature Control			Microcomputer Control		Microcomputer Control	
Dimensions (H×W×D)		mm	285×860×165		285×860×165	
Packaged Dimensions (H×W×D)		mm	360x923x265		360x923x265	
Weight		kg	10.5		10.5	
Gross Weight		kg	12.8		12.8	
OperationSound	H/M/L/SL	dBA	42/38/34/27	42/38/34/27	43/39/35/27	43/39/35/27
Sound Power	H	dBA	50	58	56	58

Все каталоги и инструкции здесь: https://splitsystema48.ru/instrukcii-po-ekspluatacii-kondicionerov.html

Outdoor Unit						
Casing Color			Ivory White		Ivory White	
Compressor	Type		Rotary compressor		Rotary compressor	
	Model		SHB 130 FFBC		SHB 130 FFBC	
	Motor Output	W	650		650	
Refrigerant Oil	Model		---		---	
	Charge	L	---		---	
Refrigerant	Model		R22		R22	
	Charge	kg	1.32		1.32	
Air Flow Rate (H/L)	m³/min		32/21	29/21	32/21	29/21
	cfm		1130/741	1024/741	1130/741	1024/741
Fan	Type		axial fan		axial fan	
	Motor Output	W	35		35	
Running Current (Rated)		A	3.26	4.17	3.45	4.36
Power Consumption (Rated)		W	590	600	600	610
Power Factor		%	90.7	92.3	92.3	93.8
Starting Current		A	1.2		1.2	
Dimensions (H×W×D)		mm	783 x 255 x 643		783 x 255 x 643	
Packaged Dimensions (H×W×D)		mm	930 x 340 x 714		930 x 340 x 714	
Weight		kg	43		43	
Gross Weight		kg	48		48	
OperationSound	H/L	dBA	46/42	47/42	47/43	48/42
Sound Power	H	dBA	59	59	60	60

Note: The data are based on the conditions shown in the table below.

Cooling	Heating	Piping Length
Indoor ; 27°CDB/19°CWB Outdoor ; 35°CDB/24°CWB	Indoor ; 20°CDB Outdoor ; 7°CDB/6°CWB	7.5m

Conversion Formulae
kcal/h=kW×860
Btu/h=kW×3414
cfm=m³/min×35.3

Все каталоги и инструкции здесь: https://splitsystema48.ru/instrukcii-po-ekspluatacii-kondicionerov.html

4. Printed Circuit Board Connector Wiring Diagram

4.1 Indoor Unit

Connectors PCB1（control PCB）

1) CN1 connector for up and down louver motor
2) CN2 connector for DC fan motor
3) CN3 connector for panel motor
4) CN4 connector for terminal block
5) CN6 connector for ambient temp. sensor and piping temp.sensor
6) CN10 connector for humidity sensor
7) CN12 connector for PCB2
8) CN13 connector for right louver motor
9) CN14 connector for left louver motor
10) CON1 connector for L(B) in terminal block
11) CON7/CON8 connector for solenoid valve
12) CON10 connector for power wiring

PCB2

CN1 connector for CN12 of PCB1

Other designations：

1) LED1 in PCB1 indicates whether the communication is right
2) SW1 in PCB2 is touch key

Все каталоги и инструкции здесь: https://splitsystema48.ru/instrukcii-po-ekspluatacii-kondicionerov.html

PCB Detail PCB(1): Control PCB (Indoor unit)

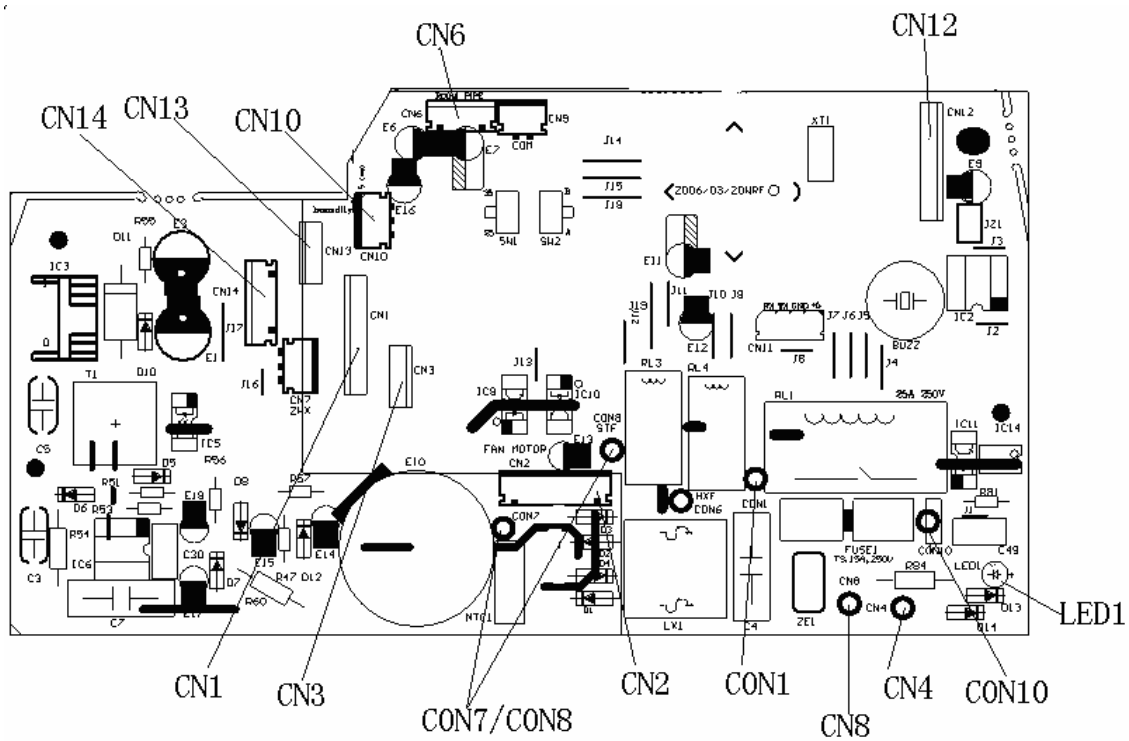

PCB(2)

Все каталоги и инструкции здесь: https://splitsystema48.ru/instrukcii-po-ekspluatacii-kondicionerov.html

4.2 Outdoor unit

Connectors

PCB1（control PCB）

1） CN1 connector for CON20 in PCB2 for supply 310V

2） CN5/CN6/CN7/CN8 connector for suction/defrost/ambient/compressor sensor

3） CN11 connector for CN3 in PCB3

4） CN14 connector for electronic inflated valve

5） CN16 connector for CN5 in PCB3

6） P7/P8/CN12 connector for fan motor

7） P1 is grounded wiring

8） P5 connector for N(IN) in PCB3

9） P6 connector for L(IN) in PCB3

PCB2

1） CON20 connector for CN1 in PCB1

2） CON22 connector for N in PCB3;

3） CON24 connector for Pin PCB3

4） CON21 connector for P（OUT+）in PCB3 ;

5） CON24 connector for N（OUT-）in PCB3

PCB3

1） CN3 connector for CN11 in PCB1

2） CN5 connector for CN16 in PCB1

3） P/N is how to connect referring to PCB2

4） U/V/W connector for black/white/red wire of compressor

5） LX1/LX2 connector for inductance

6） P（OUT+）and N（OUT-）are how to connect referring to PCB2

7） L（IN）and N（IN）are how to connect referring to PCB1

Все каталоги и инструкции здесь: https://splitsystema48.ru/instrukcii-po-ekspluatacii-kondicionerov.html

PCB Detail PCB(1): Control PCB (outdoor unit)

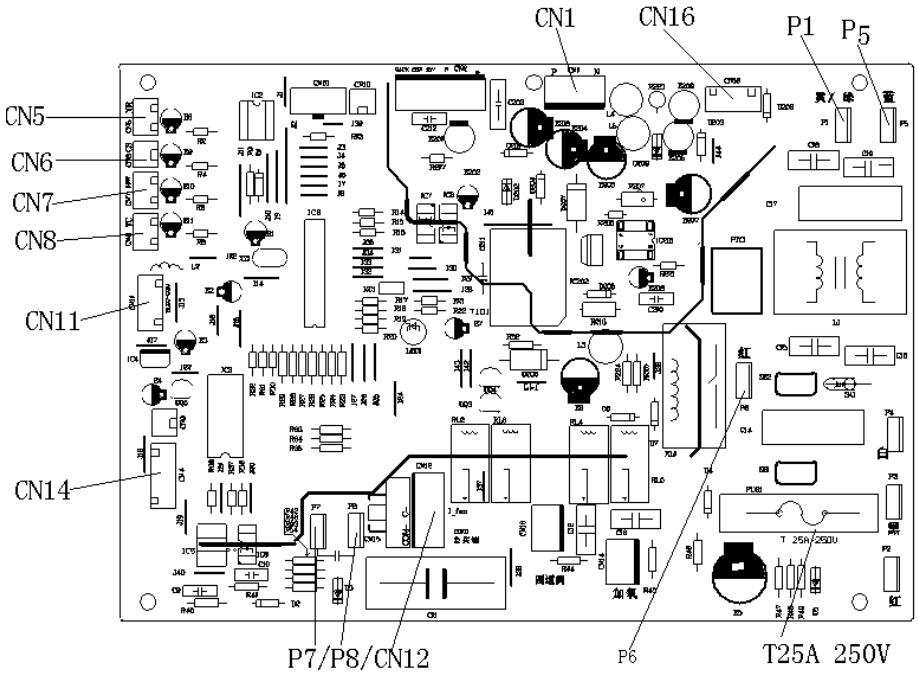

PCB(2)

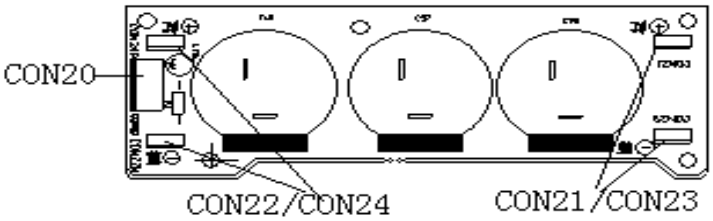

PCB(3)

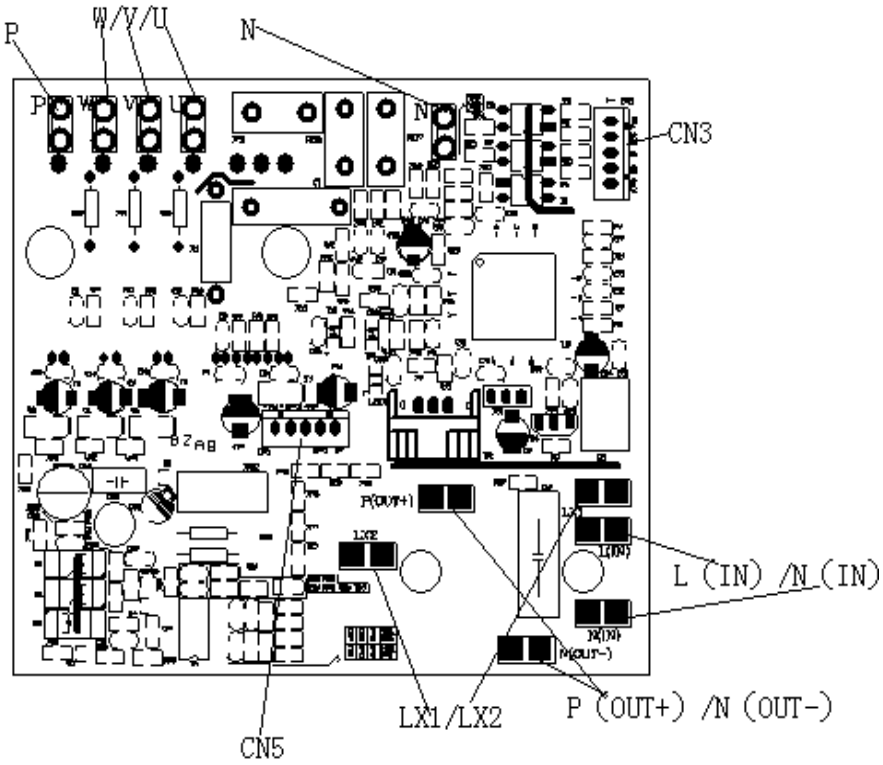

Все каталоги и инструкции здесь: https://splitsystema48.ru/instrukcii-po-ekspluatacii-kondicionerov.html

5.Funcitions and Control

5.1 Main functions and control specification of indoor unit

Note: See the list of functions for the functions applicable to different models.

5.1.1Temperature Ajusting function

Set temperature

- This function will decide the outdoor-set's running speed according to the domestic temperature and the set temperature.
- Control the indoor blower fan according to the need for temperature adjusting when the wind rate is automatic.
- Control the indoor blower fan according to the disc-tube temperature when it's running for heating.

Indoor environment temperature sensor specification

Under the conditions of short circuit or open circuit, the indoor display will flash an alarm and the indoor blower fan stops. When it returns to normal condtions, the operation will come back to normal.

Short circuitTemperature: over 126℃. Sixteen scales: over F8H.
Resistance value: below 0.65 K. Voltage: over 4.85 V
Normal temperature Temperature: 25 ℃. Sixteen scale: 40H
Resistance value: 23K . Voltage: 2.33 V
Disconnection temperature : below minus 31 ℃. Sixteen scale: below 08H .
Resistance value: below 620K. Voltage: below 0.15 V
B index=4200 R(25℃)=23K

The frequency kept when the frequency rises

When the operation enters into the work mode, in order to insure the full oil-returning some frequency should be kept for some time.

Indication time			Indication frequency
Cooling	Heating	Frost removing	Frequency kept
60 seconds	60 seconds	60 seconds	58 Hz

Modify the set temperature

The set temperature can be modified according to the unit's operation set mode, wind volume or whether it is under forceful running condition.
The modification of wind volume is only limited within the switch between weak and medium of wind volume when it is under heating mode.
Modification index table for set temperature

Mode	Content of modification	Modified variable	Modified parameter
Heating	Operation mode modification	ETBL0	4.67℃
	Forceful operation modification	ETBL1	6℃
	Weak wind volume modification	ETBL2	4.67℃
	Medium wind volume modification	ETBL3	4.67℃
Cooling	Operation mode modification	ETBL4	-0.33℃
	Forceful operation modification	ETBL5	-4℃

5.1.2Temperature section control

Все каталоги и инструкции здесь: https://splitsystema48.ru/instrukcii-po-ekspluatacii-kondicionerov.html

Deviation

Work out the deviation of temperature level as follows:

In heating mode: E=(Remote-control set temperature+ modified value)-room temperature

In cooling mode: E= room temperature -(Remote-control set temperature + modified value)

E is minus and |E|> Δ T

	Heating (℃)		Cooling (℃)	
Δ T	TCHAHL	0.67	TCHACL	0.33
afte Δ T changes	TCHAHH	0.67	TCHACH	1
condition for Δ T changes	E>3.0℃ when operation starts			

Compressor Off

The compressor stops after 120 seconds of continuous detection

When the operation starts,according to the table above, the unit will operate according to the after-the-Δ T-change parameters before the compressor stops for the first time.

From the time the compressor stops to the time it starts again, the operation will follow the Δ T (except the moisture removing mode)

When the operation starts and the operation modes change (except when the idle mode is over) and the deviation is bigger than – Δ T, the compressor starts.

When the compressor is working and the remote-controller set temperature falls below – Δ T, the compressor stops.

Compressor On

When the compressor is kept idle for 3 minutes, the deviation E will be higher than -△T+0.67℃ and the compressor will start working.

DASH Operation

When the operation starts or the operation mode changes (except when the compressor is switched on after being off), the compressor is on and the indicated maximum frequency should be as follows:

Cooling deviation to zero

Heating deviation to level F

There will be no DASH operation under trial operation, emergency operation and silent operation modes.

Temperature adjusting of different levels. (DASH operation conditions under different modes)

Все каталоги и инструкции здесь: https://splitsystema48.ru/instrukcii-po-ekspluatacii-kondicionerov.html

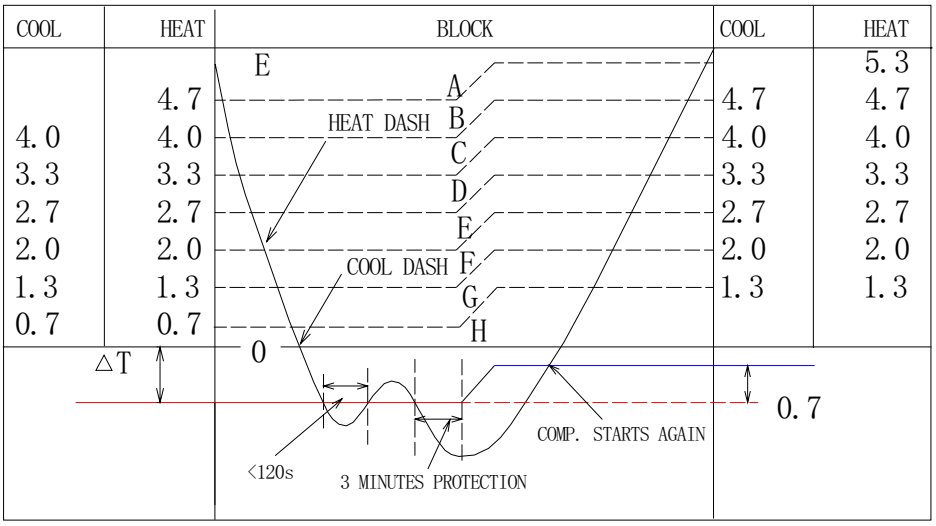

Frequencies for different levels

Within different levels, the indicated frequencies are(the frequency the indoor unit transmits to the outdoor unit) as follows ;

Under the silent mode, levels A-E have the same frequency with level F

	Indicated frequency	Frequency range	Temperature change level
Heating	FQHOT [0—7]	35-110Hz	A—H
Silent heating	FQSHOT [0—2]	35-58Hz	F—H
Cooling	FQCOOL [0—7]	35-98Hz	B—H
Silent cooling	FQSCOOL [0—2]	35-48Hz	F—H

The maximum frequency value refers to the max value listed above.

The maximum and minimum values for cooling and heating are the maximum and minimum values for correspondent items.

Controlled frequency for the same level

The indicated frequency when a level remains unchanged after the compressor operates with the same frequency for 3 minutes.

The timing will start again when there is a different frequency input. If the temperature level remains unchanged for 3 minutes, the indicated frequency will change again (add FQUPH or FQUPL)

Controlling form for the same level

	Levels of temperature change							
	A	B	C	D	E	F	G	H
Heating			FQUP (2Hz)	FQUP (2Hz)	FQUP (2Hz)	FQUP (1Hz)	FQUP (1Hz)	
Cooling	/		FQUP (2Hz)	FQUP (2Hz)	FQUP (2Hz)	FQUP (1Hz)		

Select the wind volume when it is set automatic

When the wind volume is automatic, it can be switched between strong, medium and weak according to the temperature adjusting levels.

Wind volume under the automatic wind volume mode

Все каталоги и инструкции здесь: https://splitsystema48.ru/instrukcii-po-ekspluatacii-kondicionerov.html

	Temperature adjusting levels								
	A	B	C	D	E	F	G	H	I
Heating	Strong	Strong	Strong	Strong	Strong	Medium	Weak	Weak	SLO
cooling		Strong	Strong	Strong	Medium	Medium	Weak	Weak	Weak
Moisture removing		Strong	Medium	Medium	Medium	Weak	Weak	SLO	SLO

5.1.3 Indoor blower fan control

When the wind volume is manually medium, the running speed is (strong+weak)/2.
When it is automatically medium, the running speed is (strong automatic+ weak automatic)/2(not counted if it is not up to 10rpm)

Warm boot When the heat running starts or the frost removing ends and the compressor starts again, in order to avoid cold wind, warm boot wind volume control should be done.

Heat exchange temperature

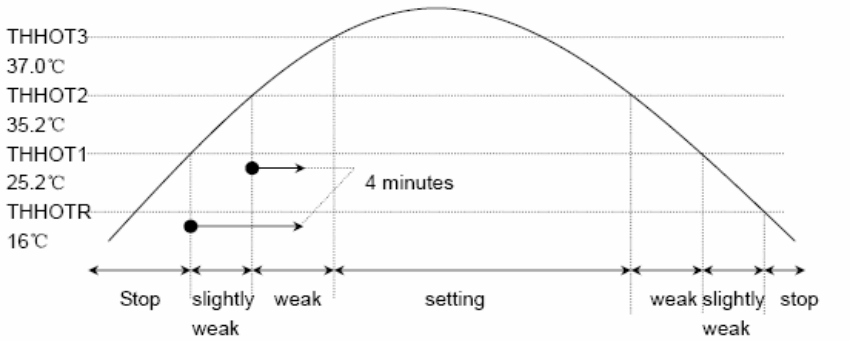

To control the indoor blower fan as shown in the table above according to the heat exchange temperature
When the heat exchange temperature rises to the level between THHOT1 and HHOT2 and even after 4 minutes it cannot reach the level between THHOT2 and THHOT3, enter into the next level without referring to the heat exchange temperature.
the blower fan stops when the heat exchange temperature is below 25℃
the blower fan is working slightly weak when he heat exchange temperature is above 25 ℃ and below 35℃
the blower fan is working weak if the he heat exchange temperature remains 35℃ for less than 4 minutes.
The blower fan works as set if the he heat exchange temperature remains 35 ℃ for more than 4 minutes
the blower fan works as set if the he heat exchange temperature remains above 37℃
Note: the numerical value above may not the same as the numerical value in indoor MCU.

the compressor 20 seconds after the compressor stops, the wind volume is weak(switching

Все каталоги и инструкции здесь: https://splitsystema48.ru/instrukcii-po-ekspluatacii-kondicionerov.html

stops and remains for idle 3 minutes	to SSLO in silent running mode)and then slightly weak. If the compressor stops when the heat running starts, the wind volume is weak
Restart of the compressor	The wind volume is set by the remote-controler after the warm boot. select the wind volume by the temperature in the automatic wind volume mode。 Refer to the temperature level control function
Frost-removing Operation	the indoor fan stops running in frost-removing mode. When the frost-removing process is over, the compressor is on,the wind volume control is the same with warm boot
cooling running	The wind volume can be set to strong, medium and weak. Automatic wind volume function will decide the wind volume according to the temperature
Moisture removing running	The wind volume can be set to strong, medium and weak.

5.1.4 Powerful Running

■Powerful running for 15 minutes
. ■The running ends the powerful running after 15 minutes
. ■The mode switch ends the powerful running
. ■Enter into the silent mode, normal running mode or timed switching on mode to end the powerful running
. ■When in automatic mode, there are powerful and silent functions for your choice.
■When the main unit is in cooling mode, it operates with powerful cooling or silent cooling. When the main unit is in heating mode, it operates with powerful heating or silent heathing. When the main unit is in wind-sending mode and moisture removing, there are no powerful .

Powerful **Heating**	Change the set temperature. With temperature adjusting function The wind volume is the automatic medium When in frost removing mode, the outdoor unit does not accept the communication signal for powerful running After 15 minutes of powerful running, the compressor can not be off within 10 minutes
Powerful Cooling	Change the set temperature. With temperature adjusting function The wind volume is the automatic strong After the compressor starts, there will be no low-intense running protection within 3 minutes

5.1.5 Silent running

■Send the silent running signal to the outdoor unit
■There is no silent mode for moisture removing and wind-sending.

Все каталоги и инструкции здесь: https://splitsystema48.ru/instrukcii-po-ekspluatacii-kondicionerov.html

Silent hearing	The wind volume is SSLO after the compressor is on The wind volume will be kept SSLO within 20 seconds after the compressor stops and then changes to weak
Silent cooling	The wind volume is SSLO

5.1.6 Air cleaning

■If the blower fan starts working after receiving the remote-control order, the aion generator starts working and sends out aions.
■The aion generator stops as the blower fan stops.
■When the aion generator is OFF and the air cleaning function is on, the blower fan starts running and the aion generator starts working again.

5.1.7 Timed running

■Set the time duration according to the time difference between the clock for timing and the current clock
■ In timing mode, the display panel will flash the light at fixed times

Timed **OFF**	When this function is set, operation modes on the panel display will not change. The timing icon will show and the operation stops when the set time comes.
Timed ON	When this function is on, the panel display will only display a question mark. The unit will operate as the set mode when the time comes.
Timed ON/OFF	The unit will start operating or stop according to the order of your setting.

5.1.8 Sleeping Running

Cooling& moisture removing mode	When under the mode of cooling or moisture removing,the set temperature will rise by 1℃ after 1 hour and another 1 ℃ after the next hour. 6 more hours later the operation stops.
heating mode	Under the heating mode,the set temperature will fall by 2℃ every 1 hour within the first two hours . it will rise by 1 ℃ after another 3 hours and stop after running for 3 hours.
Indoor fan Speed control	If the indoor blower fan is set to be strong wind before setting the sleeping running, it will be medium wind afer setting the sleeping running. If the indoor blower fan is set to be medium wind before setting the sleeping running, it will be weak wind afer setting the sleeping running. If the indoor blower fan is set to be weak wind before setting the sleeping running, the running speed of the blower will not change.

5.1.9 Automatic running mode

Все каталоги и инструкции здесь: https://splitsystema48.ru/instrukcii-po-ekspluatacii-kondicionerov.html

When the operation mode switches to automatic after the unit is powered on, the system will choose the operation mode acoording to the difference between the current set temperature and the room temperature. And then it will follow the selected mode to operate. The Tr represents room temperature and Ts represents the set temperature.
When entering into the automatic mode for the first time, please select the operation mode with the conditions below.

Tr≥Ts-3℃	select the cooling mode
Tr＜Ts-3℃	select the heating mode

The operation mode may switch between the cooling and heating acoording to the indoor termperature under the automatic mode. If the unit is under the cooling mode currently, when the temrperature is enough for the compressor to stop, the compressor stops. After 15 minutes the compressor will detect the temperature. If Tr＜Ts-3℃,then the unit will start the heating mode, otherwise it will remain in the cooling mode. If the unit is under the heating mode currently, when the termperature is enough for the compressor to stop, the compressor stops. After 15 minutes the compressor will detect the temperature. If Tr＞Ts-3℃,then the unit will start the cooling mode, otherwise it will remain in the heating mode.
There is timing function and sleeping function with this mode. If the unit is under the cooling mode then it will start the cooling hivernating mode. If the unit is under the heating mode then it will start the heatiing hivernating mode.
The wind panels may sway or stay at a position. The wind speed could be low,medium ,high or automatic.

5.1.10 Trial running

The indicated frequency for trial running is 58Hz, wind volume is strong.
The trial running will last for 30 minutes and then the unit will be powered off. The unit will exit the trial running if it receives any remote-control signal during the trial running period.
There is no low-intense running protection.

5.1.11 Low Work-intense protection control

Specification for heat-exchange termperature sensor
B fixed number=3700 R(25℃)= 10KΩ
Under the cooling /moisture removing modes,the low work-intense protection will be carried out according to the heat-exchange temperatures.
About detailed introduction ,please consult the outdoor functions explanation.

5.1.12 High Work-intense protection control

Under the heating mode, the high work-intense protection will be carried out according to the heat-exchange temperatures
About detailed introduction ,please consult the outdoor functions explanation.

5.1.13 Special function

moisture removing mode:
whenTr≥Ts+3 compressor and fan operate by the above explation.

Все каталоги и инструкции здесь: https://splitsystema48.ru/instrukcii-po-ekspluatacii-kondicionerov.html

whenTr <Ts+3 compressor operates frequency under 45HZ and outdoor fan operates by off and on.

5.2 Main functions and control specification of outdoor unit

5.2.1 Outdoor Unit Operation Frequency and Control

■ Compressor Operation Frequency Range

Outdoor Temperature	~0℃		0℃~	
Heating	10RPM	110RPM	10RPM	110RPM
Cooling	10RPM	98RPM	10RPM	98RPM
Defrosting	88rpm			

Compressor Startup Regardless of target frequency of indoor unit, each time when compressor is from off to on, it must maintain 58Hz,88Hz for one minute (Frequency will be immediately decreased under the condition that outdoor unit air discharge temperature overheating protection is activated or overcurrent of compressor) then the compressor will operate towards target frequency. This process does not exist in normal operation of unit.

Heating running When completing compressor startup operation, it will operate as per frequency of indoor unit.
after 2 minutes, compressor operation frequency will be compensated as per relevant conditions.

Cooling& Removing Moisture running When completing compressor startup operation, it will operate as per frequency of indoor unit.
After 2 minutes, compressor operation frequency will be compensated as per relevant conditions.

Compressor Frequency Increase/Decrease Speed
Rapid Frequency Increase/Decrease Speed 1 ----------1HZ/s
Slow Frequency Increase/Decrease Speed 2 ----------1HZ/10s

5.2.2 Outdoor fan control

Residual Heat Blow When compressor shuts down in cooling mode, outdoor fan automatically blows residual heat for 30s and stop.

Wind Speed Adjustment Table (when compressor starts up for 3 minutes)

Ambient Temperature	~10	10~25	25~
Cooling	Low Wind	Low Wind	High Wind
Heating	High Wind	Low Wind	Low Wind

Все каталоги и инструкции здесь: https://splitsystema48.ru/instrukcii-po-ekspluatacii-kondicionerov.html

Wind Speed Adjustment Table

(based on ambient temperature and compressor frequency after compressor runs for 3 minutes)

Cooling Compressor Frequency		F<25Hz	25Hz<=F<45Hz	45Hz<=F
Tao	Above 28℃	Low Wind	High Wind	High Wind
	Below 28℃	Low Wind	Low Wind	High Wind

Heating Compressor Frequency		F<25Hz	25Hz≤F<45Hz	45Hz≤f
Tao	Above 15℃	Low Wind	Low Wind	High Wind
	Below 15℃	Low Wind	High Wind	High Wind

5.2.3 Outdoor Electronic Expansion Valve Control

■ **Energization Initial Operation:**

Valve Complete Off Operation

■ **Valve operation after compressor startup and shutdown:**

Compressor Startup: Opening of valve must ensure restart of compressor when reaching benchmark opening.

Compressor Shutdown: It ensures complete off of valve after compressor shuts down.

■ **Valve operation when compressor is running**

Around the 2nd minute after compressor startup, valve opening can be adjusted based on various outdoor ambient temperature and corresponding frequency.

Overheat benchmark will be adjusted if air discharge temperature is too high or too low in cooling or heating mode.

5.2.4 Four-way Valve Control

In heating mode, four-way valve is on. If compressor is off or is switched to non-heating mode, four-way valve ensures that it is off at least 2 minutes after compressor shuts down.

5.2.5 Outdoor Defrosting Control

Defrosting Mode Entry Conditions

The unit will enter defrosting mode when compressor starts up and operates for 10 minutes continuously in heating mode or after compressor runs for an accumulated time of 45 minutes (Upon completion of defrosting or when switched to cooling mode, compressor accumulatedoperation time will be cleared) and when 2 minutes' continuous checking by defrosting sensor TE (check frosting condition of outdoor unit heat exchanger) and outdoor ambient temperature sensor TA meets the following conditions:

$$TE \leqslant C \times TA - \alpha$$

Among which: C:TA＜0℃，C=x

TA≥0℃，C=y

Defrosting entry temperature control :-15℃≤C×TA－α ≤-5℃

Все каталоги и инструкции здесь: https://splitsystema48.ru/instrukcii-po-ekspluatacii-kondicionerov.html

Defrosting Time Interval

When data calculated by C×TA－α falls into the range of -15℃≤C×TA－α , time interval between two defrosting cycles is 45 minutes.

When data calculated by C×TA－α falls into the range of C×TA－α <-15℃, time interval between two defrosting cycles is 65 minutes.

Defrosting Operation

When defrosting begins, compressor will stop for one minute, external fan is running and 50s later, four-way valve will be off.

When compressor starts, external fan will be off, compressor will run at 58HZ for 60s then move on to target frequency of 88HZ.

During defrosting, compressor current and air discharge overheat protection features are effective. During defrosting, if compressor shuts down due to activation of protection feature or due to malfunction, it will resume after 3 minutes. In the unit is still within defrosting cycle, it will resume defrosting and startup of compressor will be based on the rule for defrosting startup. (The unit will exit defrosting mode and handle fault in the event of 3 consecutive restart failures.)

On entering defrosting, it must guarantee that compressor will operate for a minimum of 2 minutes in defrosting mode before exit.

Defrosting Exit Condition

When one of the following conditions is met, defrosting operation will be switched to heating operation.

（1）:Temperature of outdoor heat exchanger exceeds 7℃ for 80s continuously

（2）: Temperature of outdoor heat exchanger exceeds 12℃ for 5s continuously

（3）:Defrosting operation continues for 9 minutes.

Defrosting Exit

Compressor stops and external fan starts, 50s later, four-way valve will be on, 60s later, compressor will operate as per startup process.

5.2.6 System Protection Function

Compressor Discharge Temperature Protection

As long as compressor is running, the compressor discharge overheat protection feature will be activated, yet discharge sensor fault must be alarmed 4 minutes after compressor starts.

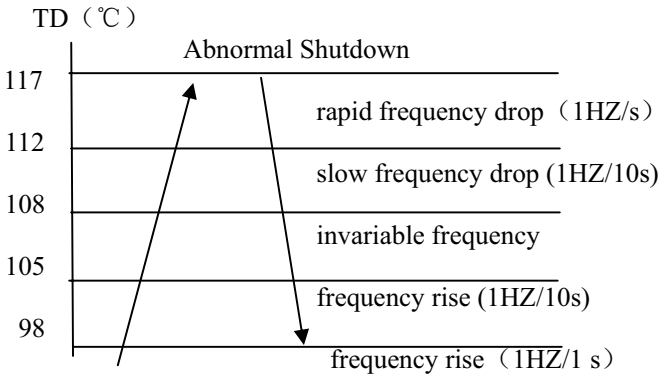

When TD>117℃ for 20s continuously，air discharge overheat protection will be activated and fault will be reported to indoor unit.

Indoor heat exchanger sensor will check temperature of indoor heat exchanger, if the temperature is higher than 55℃,compressor rotate speed will be reduced to activate indoor heat exchanger high temperature protection. When temperature of indoor heat exchanger falls below 48℃, normal control will be resumed.

Все каталоги и инструкции здесь: https://splitsystema48.ru/instrukcii-po-ekspluatacii-kondicionerov.html

High Work-intense Protection control

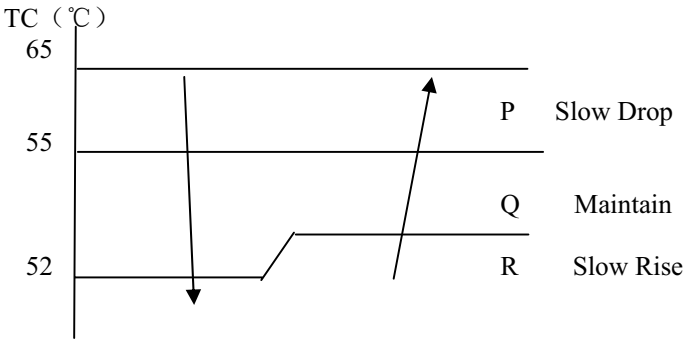

P: Drop at the speed of 1Hz/10s
Q: Maintain the previous instruction cycle.
R: Rise at the speed of 1Hz/10s

If TC>=65℃，and continues for 5s，the compressor will shutdown, outdoor fault indicator lamp will blink and fault will not be reported to indoor unit. But high work-intense protection alarm will start if there are two times of high work-intense protection within 30 minutes.

When compressor shutdown exceeds 3 minutes, and TC<48℃，compressor will restart.

Indoor Heat Exchanger Anti-freeze Protection

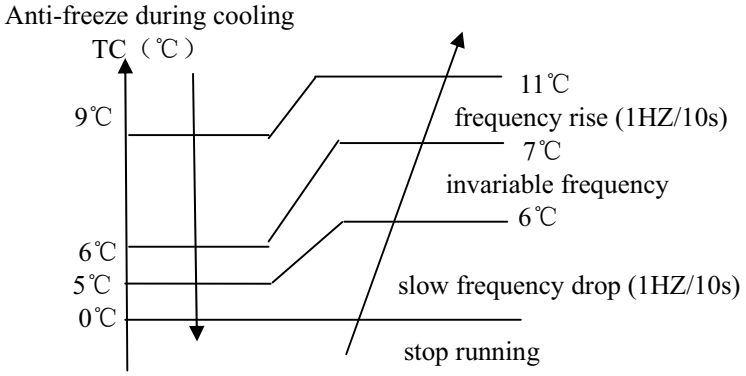

When T_C 〈 5℃，compressor frequency will drop at a speed of 1HZ/10s

When T_C starts to rise，and 6〈=T_C〈=7℃，compressor frequency will remain unchanged.

When 7 〈T_C 〈11℃, frequency will rise at a speed of 1HZ/10s.

If TC<=0℃，for 2 consecutive minutes, compressor will shutdown and outdoor fault lamp blinks. Fault will not be reported to indoor unit.

When compressor shuts down for more than3 minutes，and when TC>7℃，compressor will restart.

Overcurrent Protection

When current is larger than 12 A，compressor frequency will drop at a speed of1HZ/s.

When current is lower than 12A and higher than10.5A, frequency drop will stop and frequency will be increased at a speed of 1HZ/10s. When current is lower than 9A，target operation frequency will be resumed.

Outdoor Temperature Limit

Cooling: When outdoor temperature is lower than 15℃, cooling operation will start, compressor frequency is limited to less than46 HZ, outdoor wind speed is forced at low wind.

Heating: When outdoor temperature is higher than 20℃, heating operation will start, compressor frequency is limited to less than 46 HZ, outdoor wind speed is forced at low wind.

Все каталоги и инструкции здесь: https://splitsystema48.ru/instrukcii-po-ekspluatacii-kondicionerov.html

5.3 Function of Main Thermistor

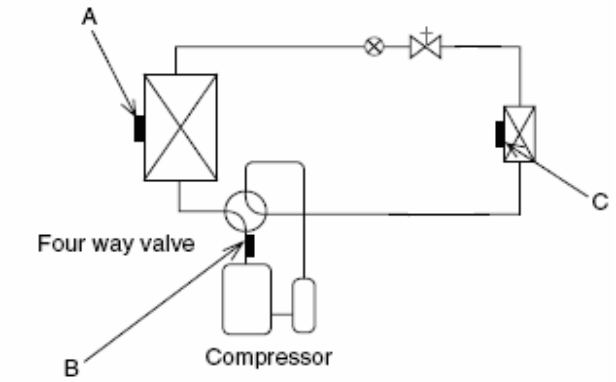

Note: A:Outdoor suction temperature sensor
B: Exhaust temperature sensor
C: Indoor heat-exchange sensor

Outdoor Suction Temperature Sensor	The outdoor heat exchanger thermistor is used for controlling target discharge temperature. The system sets a target discharge temperature according to the outdoor and indoor heat exchanger temperature, and controls the electronic expansion valve opening so that the target discharge temperature can be obtained.
Exhaust Temperature Sensor	The discharge pipe thermistor is used for controlling temperature of the discharge pipe. If the temperature of discharge pipe (used in place of the inner temperature of the compressor) rises abnormally, the operating frequency drops or the operation halts.
Indoor heat-exchange sensor	1.The indoor heat exchanger thermistor is used for controlling target discharge temperature. The system sets a target discharge temperature according to the outdoor and indoor heat exchanger temperature, and controls the electronic expansion valve opening so that the target discharge temperature can be obtained. 2.The indoor heat exchanger thermistor is used for preventing freezing.During the cooling operation, if the temperature drops abnormally, the operating frequency becomes lower, then the operation halts. 3.The indoor heat exchanger thermistor is used for anti-icing control.During the cooling operation, if the heat exchanger temperature in the room where operation is halted becomes -1°C, it is assumed as icing.

Все каталоги и инструкции здесь: https://splitsystema48.ru/instrukcii-po-ekspluatacii-kondicionerov.html

5.4 Value of Thermistor

5.4.1 Indoor unit

Room sensor

R25℃=23KΩ±3.5%

B25℃/50℃=4200K±3%

Temp.(℃)	Max.(KΩ)	Normal(KΩ)	Min.(KΩ)	Tolerance(℃)	
-30	568.8372	501.0746	440.8435	-1.97	1.75
-29	530.9600	468.6491	413.1441	-1.95	1.74
-28	495.8488	438.5314	387.3645	-1.93	1.72
-27	463.2850	410.5433	363.3602	-1.91	1.71
-26	433.0683	384.5212	340.9980	-1.90	1.70
-25	405.0156	360.3153	320.1558	-1.88	1.69
-24	378.9588	337.7879	300.7211	-1.86	1.67
-23	354.7440	316.8126	282.5905	-1.84	1.66
-22	332.2300	297.2732	265.6686	-1.82	1.64
-21	311.2873	279.0627	249.8676	-1.80	1.63
-20	291.7969	262.0831	235.1067	-1.78	1.62
-19	273.6494	246.2437	221.3111	-1.76	1.60
-18	256.7445	231.4612	208.4122	-1.74	1.59
-17	240.9897	217.6590	196.3462	-1.72	1.57
-16	226.3000	204.7662	185.0545	-1.70	1.56
-15	212.5973	192.7176	174.4829	-1.68	1.54
-14	199.8093	181.4531	164.5813	-1.66	1.53
-13	187.8698	170.9169	155.3033	-1.64	1.51
-12	176.7176	161.0578	146.6059	-1.62	1.49
-11	166.2961	151.8284	138.4495	-1.60	1.48
-10	156.5532	143.1847	130.7973	-1.58	1.46
-9	147.4409	135.0863	123.6153	-1.56	1.44
-8	138.9148	127.4956	116.8717	-1.53	1.43
-7	130.9337	120.3778	110.5374	-1.51	1.41
-6	123.4597	113.7009	104.5852	-1.49	1.39
-5	116.4577	107.4349	98.9897	-1.47	1.38
-4	109.8953	101.5523	93.7278	-1.45	1.36
-3	103.7422	96.0274	88.7774	-1.43	1.34
-2	97.9708	90.8365	84.1185	-1.40	1.32
-1	92.5551	85.9574	79.7322	-1.38	1.30
0	87.4712	81.3697	75.6011	-1.36	1.29
1	82.6970	77.0544	71.7088	-1.34	1.27
2	78.2118	72.9937	68.0402	-1.31	1.25
3	73.9966	69.1712	64.5813	-1.29	1.23
4	70.0335	65.5716	61.3188	-1.27	1.21
5	66.3062	62.1807	58.2405	-1.24	1.19
6	62.7992	58.9853	55.3351	-1.22	1.17

Все каталоги и инструкции здесь: https://splitsystema48.ru/instrukcii-po-ekspluatacii-kondicionerov.html

7	59.4984	55.9729	52.5917	-1.20	1.15
8	56.3905	53.1320	50.0006	-1.17	1.13
9	53.4631	50.4521	47.5523	-1.15	1.11
10	50.7048	47.9230	45.2384	-1.13	1.09
11	48.1049	45.5355	43.0505	-1.10	1.07
12	45.6534	43.2808	40.9813	-1.08	1.04
13	43.3410	41.1509	39.0236	-1.05	1.02
14	41.1592	39.1381	37.1708	-1.03	1.00
15	39.0998	37.2355	35.4167	-1.00	0.98
16	37.1553	35.4363	33.7555	-0.98	0.96
17	35.3186	33.7344	32.1818	-0.95	0.94
18	33.5833	32.1240	30.6905	-0.93	0.91
19	31.9432	30.5997	29.2769	-0.90	0.89
20	30.3925	29.1565	27.9365	-0.88	0.87
21	28.9259	27.7895	26.6651	-0.85	0.84
22	27.5383	26.4944	25.4589	-0.83	0.82
23	26.2252	25.2670	24.3140	-0.80	0.80
24	24.9822	24.1034	23.2271	-0.78	0.77
25	23.8050	23.0000	22.1950	-0.78	0.77
26	22.7500	21.9499	21.1520	-0.78	0.78
27	21.7477	20.9536	20.1638	-0.82	0.81
28	20.7951	20.0081	19.2272	-0.86	0.85
29	19.8895	19.1104	18.3394	-0.89	0.88
30	19.0285	18.2581	17.4974	-0.93	0.92
31	18.2094	17.4484	16.6988	-0.97	0.95
32	17.4302	16.6792	15.9410	-1.00	0.99
33	16.6885	15.9480	15.2217	-1.04	1.02
34	15.9825	15.2530	14.5389	-1.08	1.06
35	15.3103	14.5920	13.8903	-1.12	1.09
36	14.6700	13.9632	13.2743	-1.16	1.13
37	14.0599	13.3650	12.6889	-1.20	1.16
38	13.4786	12.7957	12.1325	-1.23	1.20
39	12.9244	12.2537	11.6035	-1.27	1.24
40	12.3960	11.7375	11.1004	-1.31	1.27
41	11.8921	11.2459	10.6218	-1.35	1.31
42	11.4113	10.7775	10.1665	-1.39	1.34
43	10.9526	10.3311	9.7330	-1.43	1.38
44	10.5147	9.9056	9.3204	-1.48	1.42
45	10.0967	9.4999	8.9275	-1.52	1.45
46	9.6976	9.1130	8.5532	-1.56	1.49
47	9.3163	8.7439	8.1965	-1.60	1.53
48	8.9521	8.3916	7.8566	-1.64	1.57
49	8.6040	8.0554	7.5327	-1.68	1.60
50	8.2713	7.7345	7.2237	-1.73	1.64
51	7.9531	7.4280	6.9291	-1.77	1.68
52	7.6489	7.1353	6.6480	-1.81	1.72

Все каталоги и инструкции здесь: https://splitsystema48.ru/instrukcii-po-ekspluatacii-kondicionerov.html

53	7.3580	6.8556	6.3797	-1.85	1.76
54	7.0796	6.5884	6.1237	-1.90	1.79
55	6.8131	6.3329	5.8793	-1.94	1.83
56	6.5581	6.0887	5.6459	-1.99	1.87
57	6.3140	5.8552	5.4230	-2.03	1.91
58	6.0802	5.6318	5.2100	-2.07	1.95
59	5.8563	5.4181	5.0065	-2.12	1.99
60	5.6417	5.2136	4.8120	-2.16	2.03
61	5.4361	5.0178	4.6260	-2.21	2.07
62	5.2391	4.8304	4.4481	-2.25	2.11
63	5.0502	4.6510	4.2780	-2.30	2.15
64	4.8691	4.4791	4.1153	-2.35	2.19
65	4.6954	4.3145	3.9596	-2.39	2.23
66	4.5287	4.1567	3.8105	-2.44	2.27
67	4.3689	4.0055	3.6678	-2.49	2.31
68	4.2154	3.8605	3.5312	-2.53	2.35
69	4.0682	3.7216	3.4004	-2.58	2.39
70	3.9268	3.5883	3.2750	-2.63	2.43
71	3.7910	3.4605	3.1549	-2.68	2.48
72	3.6606	3.3378	3.0398	-2.73	2.52
73	3.5353	3.2201	2.9294	-2.77	2.56
74	3.4150	3.1072	2.8237	-2.82	2.60
75	3.2993	2.9987	2.7222	-2.87	2.64
76	3.1881	2.8946	2.6249	-2.92	2.68
77	3.0812	2.7946	2.5316	-2.97	2.73
78	2.9785	2.6986	2.4420	-3.02	2.77
79	2.8796	2.6063	2.3560	-3.07	2.81
80	2.7845	2.5176	2.2735	-3.12	2.86
81	2.6931	2.4324	2.1943	-3.17	2.90
82	2.6050	2.3505	2.1182	-3.22	2.94
83	2.5203	2.2717	2.0451	-3.28	2.99
84	2.4388	2.1960	1.9749	-3.33	3.03
85	2.3602	2.1231	1.9075	-3.38	3.07
86	2.2846	2.0530	1.8426	-3.43	3.12
87	2.2118	1.9856	1.7803	-3.48	3.16
88	2.1416	1.9207	1.7204	-3.54	3.20
89	2.0740	1.8582	1.6628	-3.59	3.25
90	2.0089	1.7981	1.6074	-3.64	3.29
91	1.9461	1.7402	1.5541	-3.70	3.34
92	1.8856	1.6844	1.5028	-3.75	3.38
93	1.8272	1.6307	1.4535	-3.80	3.43
94	1.7709	1.5789	1.4060	-3.86	3.47
95	1.7166	1.5291	1.3603	-3.91	3.52
96	1.6643	1.4810	1.3163	-3.97	3.56
97	1.6138	1.4347	1.2739	-4.02	3.61

Все каталоги и инструкции здесь: https://splitsystema48.ru/instrukcii-po-ekspluatacii-kondicionerov.html

98	1.5650	1.3900	1.2331	-4.08	3.66
99	1.5180	1.3470	1.1937	-4.13	3.70
100	1.4726	1.3054	1.1559	-4.19	3.75
101	1.4287	1.2654	1.1194	-4.24	3.80
102	1.3864	1.2268	1.0842	-4.30	3.84
103	1.3455	1.1895	1.0503	-4.36	3.89
104	1.3060	1.1535	1.0176	-4.42	3.94
105	1.2679	1.1188	0.9860	-4.47	3.98
106	1.2310	1.0853	0.9556	-4.53	4.03
107	1.1954	1.0529	0.9263	-4.59	4.08
108	1.1610	1.0217	0.8980	-4.65	4.13
109	1.1277	0.9915	0.8707	-4.70	4.17
110	1.0955	0.9624	0.8443	-4.76	4.22
111	1.0644	0.9342	0.8189	-4.82	4.27
112	1.0344	0.9070	0.7943	-4.88	4.32
113	1.0053	0.8807	0.7706	-4.94	4.37
114	0.9771	0.8553	0.7478	-5.00	4.41
115	0.9499	0.8307	0.7256	-5.06	4.46
116	0.9235	0.8070	0.7043	-5.12	4.51
117	0.8980	0.7840	0.6837	-5.18	4.56
118	0.8734	0.7618	0.6637	-5.24	4.61
119	0.8495	0.7404	0.6445	-5.30	4.66
120	0.8263	0.7196	0.6258	-5.36	4.71

Все каталоги и инструкции здесь: https://splitsystema48.ru/instrukcii-po-ekspluatacii-kondicionerov.html

Pipe Sensor

R25℃=10KΩ±3%

B25℃/50℃=3700K±3%

Temp.((℃))	Max.(KΩ)	Normal(KΩ)	Min.(KΩ)	Tolerance(℃)	
-30	165.2170	147.9497	132.3678	-1.94	1.75
-29	155.5754	139.5600	125.0806	-1.93	1.74
-28	146.5609	131.7022	118.2434	-1.91	1.73
-27	138.1285	124.3392	111.8256	-1.89	1.71
-26	130.2371	117.4366	105.7989	-1.87	1.70
-25	122.8484	110.9627	100.1367	-1.85	1.69
-24	115.9272	104.8882	94.8149	-1.83	1.67
-23	109.4410	99.1858	89.8106	-1.81	1.66
-22	103.3598	93.8305	85.1031	-1.80	1.64
-21	97.6556	88.7989	80.6728	-1.78	1.63
-20	92.3028	84.0695	76.5017	-1.76	1.62
-19	87.2775	79.6222	72.5729	-1.74	1.60
-18	82.5577	75.4384	68.8710	-1.72	1.59
-17	78.1230	71.5010	65.3815	-1.70	1.57
-16	73.9543	67.7939	62.0907	-1.68	1.55
-15	70.0342	64.3023	58.9863	-1.66	1.54
-14	66.3463	61.0123	56.0565	-1.64	1.52
-13	62.8755	57.9110	53.2905	-1.62	1.51
-12	59.6076	54.9866	50.6781	-1.60	1.49
-11	56.5296	52.2278	48.2099	-1.58	1.47
-10	53.6294	49.6244	45.8771	-1.56	1.46
-9	50.8956	47.1666	43.6714	-1.54	1.44
-8	48.3178	44.8454	41.5851	-1.51	1.42
-7	45.8860	42.6525	39.6112	-1.49	1.40
-6	43.5912	40.5800	37.7429	-1.47	1.39
-5	41.4249	38.6207	35.9739	-1.45	1.37
-4	39.3792	36.7676	34.2983	-1.43	1.35
-3	37.4465	35.0144	32.7108	-1.41	1.33
-2	35.6202	33.3552	31.2062	-1.38	1.31
-1	33.8936	31.7844	29.7796	-1.36	1.29
0	32.2608	30.2968	28.4267	-1.34	1.28
1	30.7162	28.8875	27.1431	-1.32	1.26
2	29.2545	27.5519	25.9250	-1.29	1.24
3	27.8708	26.2858	24.7686	-1.27	1.22
4	26.5605	25.0851	23.6704	-1.25	1.20
5	25.3193	23.9462	22.6273	-1.23	1.18
6	24.1432	22.8656	21.6361	-1.20	1.16
7	23.0284	21.8398	20.6939	-1.18	1.14
8	21.9714	20.8659	19.7982	-1.15	1.12
9	20.9688	19.9409	18.9463	-1.13	1.09
10	20.0176	19.0621	18.1358	-1.11	1.07
11	19.1149	18.2270	17.3646	-1.08	1.05

Все каталоги и инструкции здесь: https://splitsystema48.ru/instrukcii-po-ekspluatacii-kondicionerov.html

12	18.2580	17.4331	16.6305	-1.06	1.03
13	17.4442	16.6782	15.9315	-1.03	1.01
14	16.6711	15.9601	15.2657	-1.01	0.99
15	15.9366	15.2770	14.6315	-0.98	0.96
16	15.2385	14.6268	14.0271	-0.96	0.94
17	14.5748	14.0079	13.4510	-0.93	0.92
18	13.9436	13.4185	12.9017	-0.91	0.90
19	13.3431	12.8572	12.3778	-0.88	0.87
20	12.7718	12.3223	11.8780	-0.86	0.85
21	12.2280	11.8126	11.4011	-0.83	0.83
22	11.7102	11.3267	10.9459	-0.81	0.80
23	11.2172	10.8634	10.5114	-0.78	0.78
24	10.7475	10.4216	10.0964	-0.75	0.75
25	10.3000	10.0000	9.7000	-0.75	0.75
26	9.8975	9.5974	9.2980	-0.76	0.76
27	9.5129	9.2132	8.9148	-0.80	0.80
28	9.1454	8.8465	8.5496	-0.84	0.83
29	8.7942	8.4964	8.2013	-0.87	0.86
30	8.4583	8.1621	7.8691	-0.91	0.90
31	8.1371	7.8428	7.5522	-0.95	0.93
32	7.8299	7.5377	7.2498	-0.98	0.97
33	7.5359	7.2461	6.9611	-1.02	1.00
34	7.2546	6.9673	6.6854	-1.06	1.04
35	6.9852	6.7008	6.4222	-1.10	1.07
36	6.7273	6.4459	6.1707	-1.13	1.11
37	6.4803	6.2021	5.9304	-1.17	1.14
38	6.2437	5.9687	5.7007	-1.21	1.18
39	6.0170	5.7454	5.4812	-1.25	1.22
40	5.7997	5.5316	5.2712	-1.29	1.25
41	5.5914	5.3269	5.0704	-1.33	1.29
42	5.3916	5.1308	4.8783	-1.37	1.33
43	5.2001	4.9430	4.6944	-1.41	1.36
44	5.0163	4.7630	4.5185	-1.45	1.40
45	4.8400	4.5905	4.3500	-1.49	1.44
46	4.6708	4.4252	4.1887	-1.53	1.47
47	4.5083	4.2666	4.0342	-1.57	1.51
48	4.3524	4.1145	3.8862	-1.61	1.55
49	4.2026	3.9686	3.7443	-1.65	1.59
50	4.0588	3.8287	3.6084	-1.70	1.62
51	3.9206	3.6943	3.4780	-1.74	1.66
52	3.7878	3.5654	3.3531	-1.78	1.70
53	3.6601	3.4416	3.2332	-1.82	1.74
54	3.5374	3.3227	3.1183	-1.87	1.78
55	3.4195	3.2085	3.0079	-1.91	1.82
56	3.3060	3.0989	2.9021	-1.95	1.85
57	3.1969	2.9935	2.8005	-2.00	1.89

Все каталоги и инструкции здесь: https://splitsystema48.ru/instrukcii-po-ekspluatacii-kondicionerov.html

58	3.0919	2.8922	2.7029	-2.04	1.93
59	2.9909	2.7948	2.6092	-2.08	1.97
60	2.8936	2.7012	2.5193	-2.13	2.01
61	2.8000	2.6112	2.4328	-2.17	2.05
62	2.7099	2.5246	2.3498	-2.22	2.09
63	2.6232	2.4413	2.2700	-2.26	2.13
64	2.5396	2.3611	2.1932	-2.31	2.17
65	2.4591	2.2840	2.1195	-2.36	2.21
66	2.3815	2.2098	2.0486	-2.40	2.25
67	2.3068	2.1383	1.9803	-2.45	2.29
68	2.2347	2.0695	1.9147	-2.49	2.34
69	2.1652	2.0032	1.8516	-2.54	2.38
70	2.0983	1.9393	1.7908	-2.59	2.42
71	2.0337	1.8778	1.7324	-2.63	2.46
72	1.9714	1.8186	1.6761	-2.68	2.50
73	1.9113	1.7614	1.6219	-2.73	2.54
74	1.8533	1.7064	1.5697	-2.78	2.58
75	1.7974	1.6533	1.5194	-2.83	2.63
76	1.7434	1.6021	1.4710	-2.88	2.67
77	1.6913	1.5528	1.4243	-2.92	2.71
78	1.6409	1.5051	1.3794	-2.97	2.75
79	1.5923	1.4592	1.3360	-3.02	2.80
80	1.5454	1.4149	1.2942	-3.07	2.84
81	1.5000	1.3721	1.2540	-3.12	2.88
82	1.4562	1.3308	1.2151	-3.17	2.93
83	1.4139	1.2910	1.1776	-3.22	2.97
84	1.3730	1.2525	1.1415	-3.27	3.01
85	1.3335	1.2153	1.1066	-3.32	3.06
86	1.2953	1.1794	1.0730	-3.38	3.10
87	1.2583	1.1448	1.0405	-3.43	3.15
88	1.2226	1.1113	1.0092	-3.48	3.19
89	1.1880	1.0789	0.9789	-3.53	3.24
90	1.1546	1.0476	0.9497	-3.58	3.28
91	1.1223	1.0174	0.9215	-3.64	3.33
92	1.0910	0.9882	0.8942	-3.69	3.37
93	1.0607	0.9599	0.8679	-3.74	3.42
94	1.0314	0.9326	0.8424	-3.80	3.46
95	1.0030	0.9061	0.8179	-3.85	3.51
96	0.9756	0.8806	0.7941	-3.90	3.55
97	0.9490	0.8558	0.7711	-3.96	3.60
98	0.9232	0.8319	0.7489	-4.01	3.64
99	0.8983	0.8088	0.7275	-4.07	3.69
100	0.8741	0.7863	0.7067	-4.12	3.74
101	0.8507	0.7646	0.6867	-4.18	3.78
102	0.8281	0.7436	0.6672	-4.23	3.83
103	0.8061	0.7233	0.6484	-4.29	3.88

Все каталоги и инструкции здесь: https://splitsystema48.ru/instrukcii-po-ekspluatacii-kondicionerov.html

104	0.7848	0.7036	0.6303	-4.34	3.92
105	0.7641	0.6845	0.6127	-4.40	3.97
106	0.7441	0.6661	0.5957	-4.46	4.02
107	0.7247	0.6482	0.5792	-4.51	4.07
108	0.7059	0.6308	0.5632	-4.57	4.12
109	0.6877	0.6140	0.5478	-4.63	4.16
110	0.6700	0.5977	0.5328	-4.69	4.21
111	0.6528	0.5820	0.5183	-4.74	4.26
112	0.6361	0.5667	0.5043	-4.80	4.31
113	0.6200	0.5518	0.4907	-4.86	4.36
114	0.6043	0.5374	0.4775	-4.92	4.41
115	0.5891	0.5235	0.4648	-4.98	4.45
116	0.5743	0.5100	0.4524	-5.04	4.50
117	0.5600	0.4968	0.4404	-5.10	4.55
118	0.5460	0.4841	0.4288	-5.16	4.60
119	0.5325	0.4717	0.4175	-5.22	4.65
120	0.5194	0.4597	0.4066	-5.28	4.70

Все каталоги и инструкции здесь: https://splitsystema48.ru/instrukcii-po-ekspluatacii-kondicionerov.html

Humidity Sensor

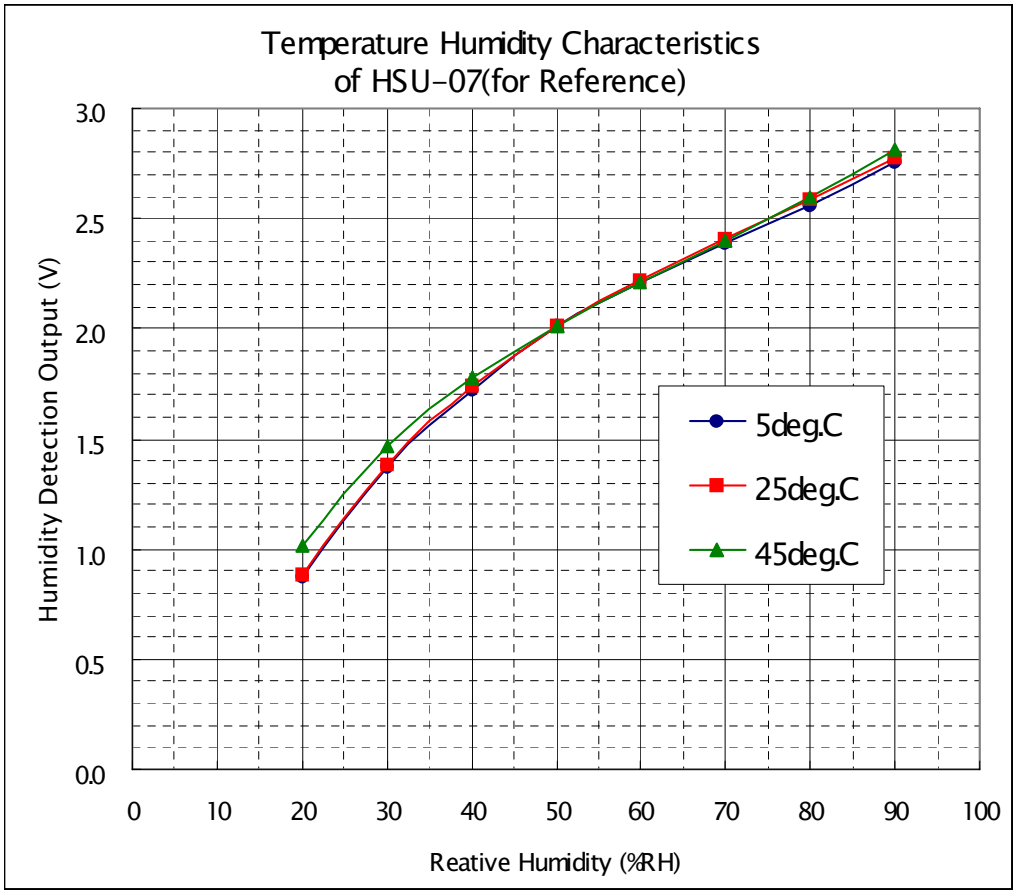

Все каталоги и инструкции здесь: https://splitsystema48.ru/instrukcii-po-ekspluatacii-kondicionerov.html

5.4.2 Outdoor Unit

Ambient Sensor, Suction Sensor, Defrosting Sensor

R25℃=10KΩ ±3%

B25℃/50℃=3700K±3%

Temp.(℃)	Max.(KΩ)	Normal(KΩ)	Min.(KΩ)	Tolerance(℃)	
-30	165.2170	147.9497	132.3678	-1.94	1.75
-29	155.5754	139.5600	125.0806	-1.93	1.74
-28	146.5609	131.7022	118.2434	-1.91	1.73
-27	138.1285	124.3392	111.8256	-1.89	1.71
-26	130.2371	117.4366	105.7989	-1.87	1.70
-25	122.8484	110.9627	100.1367	-1.85	1.69
-24	115.9272	104.8882	94.8149	-1.83	1.67
-23	109.4410	99.1858	89.8106	-1.81	1.66
-22	103.3598	93.8305	85.1031	-1.80	1.64
-21	97.6556	88.7989	80.6728	-1.78	1.63
-20	92.3028	84.0695	76.5017	-1.76	1.62
-19	87.2775	79.6222	72.5729	-1.74	1.60
-18	82.5577	75.4384	68.8710	-1.72	1.59
-17	78.1230	71.5010	65.3815	-1.70	1.57
-16	73.9543	67.7939	62.0907	-1.68	1.55
-15	70.0342	64.3023	58.9863	-1.66	1.54
-14	66.3463	61.0123	56.0565	-1.64	1.52
-13	62.8755	57.9110	53.2905	-1.62	1.51
-12	59.6076	54.9866	50.6781	-1.60	1.49
-11	56.5296	52.2278	48.2099	-1.58	1.47
-10	53.6294	49.6244	45.8771	-1.56	1.46
-9	50.8956	47.1666	43.6714	-1.54	1.44
-8	48.3178	44.8454	41.5851	-1.51	1.42
-7	45.8860	42.6525	39.6112	-1.49	1.40
-6	43.5912	40.5800	37.7429	-1.47	1.39
-5	41.4249	38.6207	35.9739	-1.45	1.37
-4	39.3792	36.7676	34.2983	-1.43	1.35
-3	37.4465	35.0144	32.7108	-1.41	1.33
-2	35.6202	33.3552	31.2062	-1.38	1.31
-1	33.8936	31.7844	29.7796	-1.36	1.29
0	32.2608	30.2968	28.4267	-1.34	1.28
1	30.7162	28.8875	27.1431	-1.32	1.26
2	29.2545	27.5519	25.9250	-1.29	1.24
3	27.8708	26.2858	24.7686	-1.27	1.22
4	26.5605	25.0851	23.6704	-1.25	1.20
5	25.3193	23.9462	22.6273	-1.23	1.18
6	24.1432	22.8656	21.6361	-1.20	1.16
7	23.0284	21.8398	20.6939	-1.18	1.14
8	21.9714	20.8659	19.7982	-1.15	1.12
9	20.9688	19.9409	18.9463	-1.13	1.09

Все каталоги и инструкции здесь: https://splitsystema48.ru/instrukcii-po-ekspluatacii-kondicionerov.html

10	20.0176	19.0621	18.1358	-1.11	1.07
11	19.1149	18.2270	17.3646	-1.08	1.05
12	18.2580	17.4331	16.6305	-1.06	1.03
13	17.4442	16.6782	15.9315	-1.03	1.01
14	16.6711	15.9601	15.2657	-1.01	0.99
15	15.9366	15.2770	14.6315	-0.98	0.96
16	15.2385	14.6268	14.0271	-0.96	0.94
17	14.5748	14.0079	13.4510	-0.93	0.92
18	13.9436	13.4185	12.9017	-0.91	0.90
19	13.3431	12.8572	12.3778	-0.88	0.87
20	12.7718	12.3223	11.8780	-0.86	0.85
21	12.2280	11.8126	11.4011	-0.83	0.83
22	11.7102	11.3267	10.9459	-0.81	0.80
23	11.2172	10.8634	10.5114	-0.78	0.78
24	10.7475	10.4216	10.0964	-0.75	0.75
25	10.3000	10.0000	9.7000	-0.75	0.75
26	9.8975	9.5974	9.2980	-0.76	0.76
27	9.5129	9.2132	8.9148	-0.80	0.80
28	9.1454	8.8465	8.5496	-0.84	0.83
29	8.7942	8.4964	8.2013	-0.87	0.86
30	8.4583	8.1621	7.8691	-0.91	0.90
31	8.1371	7.8428	7.5522	-0.95	0.93
32	7.8299	7.5377	7.2498	-0.98	0.97
33	7.5359	7.2461	6.9611	-1.02	1.00
34	7.2546	6.9673	6.6854	-1.06	1.04
35	6.9852	6.7008	6.4222	-1.10	1.07
36	6.7273	6.4459	6.1707	-1.13	1.11
37	6.4803	6.2021	5.9304	-1.17	1.14
38	6.2437	5.9687	5.7007	-1.21	1.18
39	6.0170	5.7454	5.4812	-1.25	1.22
40	5.7997	5.5316	5.2712	-1.29	1.25
41	5.5914	5.3269	5.0704	-1.33	1.29
42	5.3916	5.1308	4.8783	-1.37	1.33
43	5.2001	4.9430	4.6944	-1.41	1.36
44	5.0163	4.7630	4.5185	-1.45	1.40
45	4.8400	4.5905	4.3500	-1.49	1.44
46	4.6708	4.4252	4.1887	-1.53	1.47
47	4.5083	4.2666	4.0342	-1.57	1.51
48	4.3524	4.1145	3.8862	-1.61	1.55
49	4.2026	3.9686	3.7443	-1.65	1.59
50	4.0588	3.8287	3.6084	-1.70	1.62
51	3.9206	3.6943	3.4780	-1.74	1.66
52	3.7878	3.5654	3.3531	-1.78	1.70
53	3.6601	3.4416	3.2332	-1.82	1.74
54	3.5374	3.3227	3.1183	-1.87	1.78
55	3.4195	3.2085	3.0079	-1.91	1.82

Все каталоги и инструкции здесь: https://splitsystema48.ru/instrukcii-po-ekspluatacii-kondicionerov.html

56	3.3060	3.0989	2.9021	-1.95	1.85
57	3.1969	2.9935	2.8005	-2.00	1.89
58	3.0919	2.8922	2.7029	-2.04	1.93
59	2.9909	2.7948	2.6092	-2.08	1.97
60	2.8936	2.7012	2.5193	-2.13	2.01
61	2.8000	2.6112	2.4328	-2.17	2.05
62	2.7099	2.5246	2.3498	-2.22	2.09
63	2.6232	2.4413	2.2700	-2.26	2.13
64	2.5396	2.3611	2.1932	-2.31	2.17
65	2.4591	2.2840	2.1195	-2.36	2.21
66	2.3815	2.2098	2.0486	-2.40	2.25
67	2.3068	2.1383	1.9803	-2.45	2.29
68	2.2347	2.0695	1.9147	-2.49	2.34
69	2.1652	2.0032	1.8516	-2.54	2.38
70	2.0983	1.9393	1.7908	-2.59	2.42
71	2.0337	1.8778	1.7324	-2.63	2.46
72	1.9714	1.8186	1.6761	-2.68	2.50
73	1.9113	1.7614	1.6219	-2.73	2.54
74	1.8533	1.7064	1.5697	-2.78	2.58
75	1.7974	1.6533	1.5194	-2.83	2.63
76	1.7434	1.6021	1.4710	-2.88	2.67
77	1.6913	1.5528	1.4243	-2.92	2.71
78	1.6409	1.5051	1.3794	-2.97	2.75
79	1.5923	1.4592	1.3360	-3.02	2.80
80	1.5454	1.4149	1.2942	-3.07	2.84
81	1.5000	1.3721	1.2540	-3.12	2.88
82	1.4562	1.3308	1.2151	-3.17	2.93
83	1.4139	1.2910	1.1776	-3.22	2.97
84	1.3730	1.2525	1.1415	-3.27	3.01
85	1.3335	1.2153	1.1066	-3.32	3.06
86	1.2953	1.1794	1.0730	-3.38	3.10
87	1.2583	1.1448	1.0405	-3.43	3.15
88	1.2226	1.1113	1.0092	-3.48	3.19
89	1.1880	1.0789	0.9789	-3.53	3.24
90	1.1546	1.0476	0.9497	-3.58	3.28
91	1.1223	1.0174	0.9215	-3.64	3.33
92	1.0910	0.9882	0.8942	-3.69	3.37
93	1.0607	0.9599	0.8679	-3.74	3.42
94	1.0314	0.9326	0.8424	-3.80	3.46
95	1.0030	0.9061	0.8179	-3.85	3.51
96	0.9756	0.8806	0.7941	-3.90	3.55
97	0.9490	0.8558	0.7711	-3.96	3.60
98	0.9232	0.8319	0.7489	-4.01	3.64
99	0.8983	0.8088	0.7275	-4.07	3.69
100	0.8741	0.7863	0.7067	-4.12	3.74
101	0.8507	0.7646	0.6867	-4.18	3.78

Все каталоги и инструкции здесь: https://splitsystema48.ru/instrukcii-po-ekspluatacii-kondicionerov.html

102	0.8281	0.7436	0.6672	-4.23	3.83
103	0.8061	0.7233	0.6484	-4.29	3.88
104	0.7848	0.7036	0.6303	-4.34	3.92
105	0.7641	0.6845	0.6127	-4.40	3.97
106	0.7441	0.6661	0.5957	-4.46	4.02
107	0.7247	0.6482	0.5792	-4.51	4.07
108	0.7059	0.6308	0.5632	-4.57	4.12
109	0.6877	0.6140	0.5478	-4.63	4.16
110	0.6700	0.5977	0.5328	-4.69	4.21
111	0.6528	0.5820	0.5183	-4.74	4.26
112	0.6361	0.5667	0.5043	-4.80	4.31
113	0.6200	0.5518	0.4907	-4.86	4.36
114	0.6043	0.5374	0.4775	-4.92	4.41
115	0.5891	0.5235	0.4648	-4.98	4.45
116	0.5743	0.5100	0.4524	-5.04	4.50
117	0.5600	0.4968	0.4404	-5.10	4.55
118	0.5460	0.4841	0.4288	-5.16	4.60
119	0.5325	0.4717	0.4175	-5.22	4.65
120	0.5194	0.4597	0.4066	-5.28	4.70

Все каталоги и инструкции здесь: https://splitsystema48.ru/instrukcii-po-ekspluatacii-kondicionerov.html

Discharging Sensor

R80℃=50KΩ±3%

B25/80℃=4450K±3%

Temp.((℃))	Max.(KΩ)	Normal(KΩ)	Min.(KΩ)	Tolerance(℃)	
-30	14646.0505	12061.7438	9924.4999	-2.96	2.45
-29	13654.1707	11267.8730	9290.2526	-2.95	2.44
-28	12735.8378	10531.3695	8700.6388	-2.93	2.44
-27	11885.1336	9847.7240	8152.2338	-2.92	2.43
-26	11096.6531	9212.8101	7641.8972	-2.91	2.42
-25	10365.4565	8622.8491	7166.7474	-2.90	2.42
-24	9687.0270	8074.3787	6724.1389	-2.88	2.41
-23	9057.2314	7564.2244	6311.6413	-2.87	2.41
-22	8472.2852	7089.4741	5927.0206	-2.86	2.40
-21	7928.7217	6647.4547	5568.2222	-2.84	2.39
-20	7423.3626	6235.7109	5233.3554	-2.83	2.39
-19	6953.2930	5851.9864	4920.6791	-2.82	2.38
-18	6515.8375	5494.2064	4628.5894	-2.80	2.37
-17	6108.5393	5160.4621	4355.6078	-2.79	2.37
-16	5729.1413	4848.9963	4100.3708	-2.77	2.36
-15	5375.5683	4558.1906	3861.6201	-2.76	2.35
-14	5045.9114	4286.5535	3638.1938	-2.75	2.34
-13	4738.4141	4032.7098	3429.0191	-2.73	2.34
-12	4451.4586	3795.3910	3233.1039	-2.72	2.33
-11	4183.5548	3573.4260	3049.5312	-2.70	2.32
-10	3933.3289	3365.7336	2877.4527	-2.69	2.31
-9	3699.5139	3171.3148	2716.0828	-2.67	2.30
-8	3480.9407	2989.2460	2564.6945	-2.66	2.29
-7	3276.5302	2818.6731	2422.6139	-2.64	2.28
-6	3085.2854	2658.8058	2289.2164	-2.63	2.28
-5	2906.2851	2508.9126	2163.9230	-2.61	2.27
-4	2738.6777	2368.3158	2046.1961	-2.60	2.26
-3	2581.6752	2236.3876	1935.5371	-2.58	2.25
-2	2434.5487	2112.5459	1831.4826	-2.56	2.24
-1	2296.6230	1996.2509	1733.6024	-2.55	2.23
0	2167.2730	1887.0018	1641.4966	-2.53	2.22
1	2045.9191	1784.3336	1554.7931	-2.52	2.21
2	1932.0242	1687.8144	1473.1460	-2.50	2.20
3	1825.0899	1597.0431	1396.2333	-2.48	2.19
4	1724.6540	1511.6468	1323.7551	-2.47	2.17
5	1630.2870	1431.2787	1255.4324	-2.45	2.16
6	1541.5904	1355.6163	1191.0048	-2.43	2.15
7	1458.1938	1284.3593	1130.2298	-2.41	2.14
8	1379.7528	1217.2282	1072.8813	-2.40	2.13
9	1305.9472	1153.9626	1018.7481	-2.38	2.12
10	1236.4792	1094.3200	967.6334	-2.36	2.11
11	1171.0715	1038.0743	919.3533	-2.35	2.09

Все каталоги и инструкции здесь: https://splitsystema48.ru/instrukcii-po-ekspluatacii-kondicionerov.html

12	1109.4661	985.0146	873.7359	-2.33	2.08
13	1051.4226	934.9440	830.6210	-2.31	2.07
14	996.7169	887.6792	789.8583	-2.29	2.06
15	945.1404	843.0486	751.3077	-2.27	2.04
16	896.4981	800.8922	714.8380	-2.26	2.03
17	850.6086	761.0603	680.3265	-2.24	2.02
18	807.3024	723.4134	647.6580	-2.22	2.00
19	766.4212	687.8205	616.7252	-2.20	1.99
20	727.8172	654.1596	587.4271	-2.18	1.98
21	691.3524	622.3161	559.6694	-2.16	1.96
22	656.8979	592.1831	533.3634	-2.14	1.95
23	624.3328	563.6604	508.4261	-2.12	1.93
24	593.5446	536.6540	484.7796	-2.10	1.92
25	564.4275	511.0760	462.3510	-2.09	1.90
26	536.9865	486.9352	441.1516	-2.07	1.89
27	511.0105	464.0500	421.0258	-2.05	1.87
28	486.4151	442.3499	401.9146	-2.03	1.86
29	463.1208	421.7683	383.7626	-2.01	1.84
30	441.0535	402.2430	366.5175	-1.99	1.83
31	420.1431	383.7151	350.1301	-1.97	1.81
32	400.3242	366.1295	334.5542	-1.95	1.80
33	381.5350	349.4341	319.7460	-1.93	1.78
34	363.7176	333.5801	305.6645	-1.90	1.76
35	346.8176	318.5216	292.2709	-1.88	1.75
36	330.7839	304.2151	279.5286	-1.86	1.73
37	315.5682	290.6199	267.4031	-1.84	1.71
38	301.1254	277.6976	255.8620	-1.82	1.70
39	287.4128	265.4119	244.8745	-1.80	1.68
40	274.3905	253.7288	234.4118	-1.78	1.66
41	262.0206	242.6161	224.4465	-1.76	1.64
42	250.2676	232.0436	214.9529	-1.74	1.63
43	239.0983	221.9825	205.9065	-1.71	1.61
44	228.4809	212.4060	197.2844	-1.69	1.59
45	218.3860	203.2887	189.0648	-1.67	1.57
46	208.7855	194.6066	181.2273	-1.65	1.55
47	199.6531	186.3369	173.7524	-1.63	1.54
48	190.9639	178.4584	166.6217	-1.60	1.52
49	182.6945	170.9508	159.8181	-1.58	1.50
50	174.8228	163.7951	153.3249	-1.56	1.48
51	167.3280	156.9733	147.1268	-1.53	1.46
52	160.1904	150.4683	141.2090	-1.51	1.44
53	153.3914	144.2641	135.5577	-1.49	1.42
54	146.9136	138.3454	130.1598	-1.47	1.40
55	140.7403	132.6980	125.0027	-1.44	1.38
56	134.8559	127.3081	120.0746	-1.42	1.36
57	129.2457	122.1630	115.3645	-1.40	1.34

Все каталоги и инструкции здесь: https://splitsystema48.ru/instrukcii-po-ekspluatacii-kondicionerov.html

58	123.8956	117.2504	110.8618	-1.37	1.32
59	118.7926	112.5589	106.5564	-1.35	1.30
60	113.9241	108.0776	102.4388	-1.32	1.28
61	109.2784	103.7961	98.5000	-1.30	1.26
62	104.8443	99.7046	94.7315	-1.28	1.23
63	100.6112	95.7939	91.1253	-1.25	1.21
64	96.5692	92.0553	87.6735	-1.23	1.19
65	92.7088	88.4805	84.3690	-1.20	1.17
66	89.0211	85.0614	81.2048	-1.18	1.15
67	85.4976	81.7908	78.1744	-1.15	1.12
68	82.1303	78.6615	75.2715	-1.13	1.10
69	78.9116	75.6668	72.4902	-1.10	1.08
70	75.8343	72.8004	69.8249	-1.08	1.06
71	72.8916	70.0561	67.2703	-1.05	1.03
72	70.0770	67.4283	64.8213	-1.03	1.01
73	67.3844	64.9115	62.4731	-1.00	0.99
74	64.8080	62.5006	60.2211	-0.98	0.96
75	62.3423	60.1906	58.0609	-0.95	0.94
76	59.9821	57.9770	55.9885	-0.92	0.92
77	57.7223	55.8552	53.9998	-0.90	0.89
78	55.5583	53.8210	52.0912	-0.87	0.87
79	53.4856	51.8706	50.2591	-0.85	0.84
80	51.5000	50.0000	48.5000	-0.85	0.84
81	49.7063	48.2057	46.7083	-0.85	0.85
82	47.9835	46.4842	44.9911	-0.89	0.89
83	46.3286	44.8323	43.3452	-0.93	0.92
84	44.7385	43.2468	41.7672	-0.96	0.95
85	43.2105	41.7248	40.2540	-1.00	0.99
86	41.7386	40.2604	38.7996	-1.03	1.02
87	40.3241	38.8545	37.4048	-1.07	1.06
88	38.9643	37.5045	36.0668	-1.11	1.09
89	37.6569	36.2078	34.7831	-1.14	1.13
90	36.3996	34.9622	33.5513	-1.18	1.16
91	35.1903	33.7653	32.3689	-1.22	1.19
92	34.0269	32.6151	31.2338	-1.26	1.23
93	32.9075	31.5096	30.1438	-1.30	1.27
94	31.8302	30.4467	29.0970	-1.33	1.30
95	30.7933	29.4246	28.0915	-1.37	1.34
96	29.7950	28.4417	27.1254	-1.41	1.37
97	28.8337	27.4961	26.1970	-1.45	1.41
98	27.9078	26.5864	25.3048	-1.49	1.44
99	27.0160	25.7110	24.4470	-1.53	1.48
100	26.1569	24.8685	23.6222	-1.57	1.52
101	25.3290	24.0574	22.8291	-1.61	1.55
102	24.5311	23.2765	22.0662	-1.65	1.59
103	23.7620	22.5245	21.3323	-1.69	1.63

Все каталоги и инструкции здесь: https://splitsystema48.ru/instrukcii-po-ekspluatacii-kondicionerov.html

104	23.0205	21.8002	20.6261	-1.73	1.66
105	22.3055	21.1025	19.9465	-1.77	1.70
106	21.6159	20.4303	19.2924	-1.81	1.74
107	20.9508	19.7825	18.6626	-1.85	1.77
108	20.3091	19.1582	18.0563	-1.89	1.81
109	19.6899	18.5564	17.4723	-1.93	1.85
110	19.0924	17.9761	16.9098	-1.98	1.89
111	18.5157	17.4166	16.3680	-2.02	1.93
112	17.9590	16.8769	15.8458	-2.06	1.96
113	17.4214	16.3564	15.3427	-2.10	2.00
114	16.9023	15.8542	14.8577	-2.15	2.04
115	16.4010	15.3696	14.3902	-2.19	2.08
116	15.9167	14.9020	13.9394	-2.23	2.12
117	15.4489	14.4506	13.5047	-2.27	2.16
118	14.9968	14.0149	13.0855	-2.32	2.19
119	14.5599	13.5942	12.6811	-2.36	2.23
120	14.1376	13.1879	12.2909	-2.41	2.27
121	13.7294	12.7955	11.9144	-2.45	2.31
122	13.3347	12.4165	11.5510	-2.50	2.35
123	12.9531	12.0503	11.2003	-2.54	2.39
124	12.5840	11.6965	10.8617	-2.58	2.43
125	12.2270	11.3545	10.5348	-2.63	2.47
126	11.8817	11.0240	10.2191	-2.68	2.51
127	11.5475	10.7046	9.9142	-2.72	2.55
128	11.2242	10.3957	9.6197	-2.77	2.59
129	10.9112	10.0970	9.3352	-2.81	2.63
130	10.6084	9.8082	9.0602	-2.86	2.67
131	10.3151	9.5288	8.7945	-2.91	2.71
132	10.0312	9.2586	8.5378	-2.95	2.75
133	9.7563	8.9971	8.2895	-3.00	2.80
134	9.4901	8.7441	8.0495	-3.05	2.84
135	9.2322	8.4993	7.8175	-3.09	2.88
136	8.9824	8.2623	7.5931	-3.14	2.92
137	8.7404	8.0329	7.3760	-3.19	2.96
138	8.5059	7.8108	7.1660	-3.24	3.00
139	8.2787	7.5958	6.9629	-3.29	3.04
140	8.0584	7.3875	6.7664	-3.33	3.09

Все каталоги и инструкции здесь: https://splitsystema48.ru/instrukcii-po-ekspluatacii-kondicionerov.html

6. System Configuration

6.1 System Configuration

After the installation and test operation of the room air conditioner have been completed, it should be operated and handled as described below. Every user would like to know the correct method of operation of the room air conditioner, to check if it is capable of cooling (or heating) well, and to know a clever method of using it.In order to meet this expectation of the users, giving sufficient explanations taking enough time can be said to reduce about 80% of the requests for servicing. However good the installation work is and however good the functions are, the customer may blame either the room air conditioner or its installation work because of improper handling. The installation work and handing over of the unit can only be considered to have been completed when its handling has been explained to the user without using technical terms but giving full knowledge of the equipment.

Все каталоги и инструкции здесь: https://splitsystema48.ru/instrukcii-po-ekspluatacii-kondicionerov.html

6.2 Instruction

Cautions

Disposal of the old air conditioner

Before disposing an old air conditioner that goes out of use, please make sure it's inoperative and safe. Unplug the air conditioner in order to avoid the risk of child entrapment.

It must be noticed that air conditioner system contains refrigerants, which require specialized waste disposal. The valuable materials contained in an air conditioner can be recycled .Contact your local waste disposal center for proper disposal of an old air conditioner and contact your local authority or your dealer if you have any question. Please ensure that the pipework of your air conditioner does not get damagedprior to being picked up by the relevant waste disposal center, and contribute to environmental awareness by insisting on an appropriate, anti-pollution method of disposal.

Disposal of the packaging of your new air conditioner

All the packaging materials employed in the package of your new air conditioner may be disposed without any danger to the environment.

The cardboard box may be broken or cut into smaller pieces and given to a waste paper disposal service. The wrapping bag made of polyethylene and the polyethylene foam pads contain no fluorochloric hydrocarbon.

All these valuable materials may be taken to a waste collecting center and used again after adequate recycling.

Consult your local authorities for the name and address of the waste materials collecting centers and waste paper disposal services nearest to your house.

Safety Instructions and Warnings

Before starting the air conditioner, read the information given in the User's Guide carefully. The User's Guide contains very important observations relating to the assembly, operation and maintenance of the air conditioner.

The manufacturer does not accept responsibility for any damages that may arise due to non-observation of the following instruction.

- Damaged air conditioners are not to be put into operation. In case of doubt, consult your supplier.

- Use of the air conditioner is to be carried out in strict compliance with the relative instructions set forth in the User's Guide.

- Installation shall be done by professional people, don't install unit by yourself.

- For the purpose of the safety,the air conditioner must be properly grounded in accordance with specifications.

- Always remember to unplug the air conditioner before openning inlet grill. Never unplug your air conditioner by pulling on the power cord. Always grip plug firmly and pull straight out from the outlet.

- All electrical repairs must be carried out by qualified electricians. Inadequate repairs may result in a major source of danger for the user of the air conditioner.

- Do not damage any parts of the air conditioner that carry refrigerant by piercing or performating the air conditioner's tubes with sharp or pointed items, crushing or twisting any tubes, or scraping the coatings off the surfaces. If the refrigerant spurts out and gets into eyes, it may result in serious eye injuries.

Все каталоги и инструкции здесь: https://splitsystema48.ru/instrukcii-po-ekspluatacii-kondicionerov.html

Cautions

- Do not obstruct or cover the ventilation grille of the air conditoner.Do not put fingers or any other things into the inlet/outlet and swing louver.

- Do not allow children to play with the air conditioner.In no case should children be allowed to sit on the outdoor unit.

Specifications

- The refrigerating circuit is leak-proof.

The machine is adaptive in following situation

1.Applicable ambient temperature range:

Cooling	Indoor	Maximum:D.B/W.B	32°C/23°C
		Minimum:D.B/W.B	18°C/14°C
	Outdoor	Maximum:D.B/W.B	43°C/26°C
		Minimum:D.B	18°C
Heating	Indoor	Maximum:D.B	27°C
		Minimum:D.B	15°C
	Outdoor	Maximum:D.B/W.B	24°C/18°C
		Minimum:D.B/W.B	-7°C/-8°C

2. If the power supply cord is damaged, it must be replaced by the manufacturer or its service agent or a similar qualified person.

3. If the fuse of indoor unit on PC board is broken,please change it with the type of T. 3.15A/ 250V. If the fuse of outdoor unit is broken,change it with the type of T.25A/250V

4. The wiring method should be in line with the local wiring standard.

5. After installation, the power plug should be easily reached.

6. The waste battery should be disposed properly.

7. The appliance is not intended for use by young children or infirm persons without supervision.

8. Young children should be supervised to ensure that they do not play with the applience.

9.Please employ the proper power plug, which fit into the power supply cord.

10 .The power plug and connecting cable must have acquired the local attestation.

11.In order to protect the units,please turn off the A/C first, and at least 30 seconds later, cutting off the power.

Все каталоги и инструкции здесь: https://splitsystema48.ru/instrukcii-po-ekspluatacii-kondicionerov.html

Cautions

Safety Instruction

- Please read the following Safety Instructions carefully prior to use.
- The instructions are classified into two levels, WARNING and CAUTION according to the seriousness of possible risks and damages as follows. Compliance to the instructions are strictly required for safety use.

Installation

⚠ WARNING

Please call Sales/Service Shop for the Installation.
Do not attempt to install the air conditioner by yourself because improper works may cause electric shock, fire, water leakage.

Installation in a inadequate place may cause accidents. Do not install in the following place.

⚠ CAUTION

Connect the earth cable.	Do not install in the place where there is any possibility of inflammable gas leakage around the unit.	Do not get the unit exposed to vapor or oil steam.	Check proper installation of the drainage securely
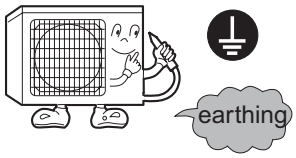	PROHIBITION	PROHIBITION	STRICT ENFORCEMENT 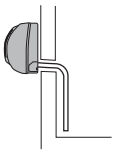

Все каталоги и инструкции здесь: https://splitsystema48.ru/instrukcii-po-ekspluatacii-kondicionerov.html

Cautions

⚠ WARNING

When abnormality such as burnt-small found, immediately stop the operation button and contact sales shop.

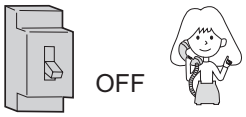

STRICT ENFORCEMENT

Use an exclusive power source with a circuit breaker

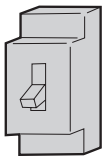

Connect power supply cord to the outlet completely

STRICT ENFORCEMENT

Use the proper voltage

STRICT ENFORCEMENT

Do not use power supply cord extended or connected in halfway

PROHIBITION

Do not use power supply cord in a bundle.

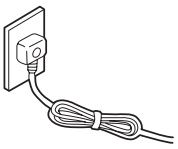

PROHIBITION

Take care not to damage the power supply cord.

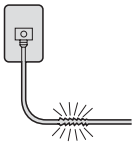

PROHIBITION

Do not insert objects into the air inlet or outlet.

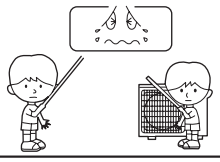

PROHIBITION

Do not start or stop the operation by disconnecting the power supply cord and so on.

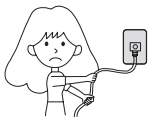

PROHIBITION

Do not channel the air flow directly at people, especially at infants or the aged.

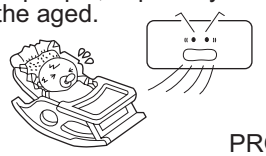

PROHIBITION

Do not try to repair or reconstruct by yourself.

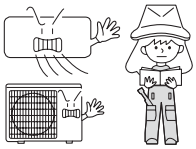

⚠ CAUTION

Do not use for the purpose of storage of food, art work, precise equipment, breeding, or cultivation.

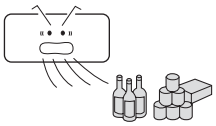

PROHIBITION

Take fresh air occasionally especially when gas appliance is running at the same time.

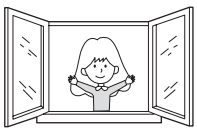

STRICT ENFORCEMENT

Do not operate the switch with wet hand.

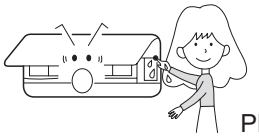

PROHIBITION

Do not install the unit near a fireplace or other heating apparatus.

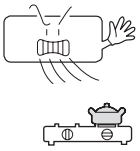

PROHIBITION

Check good condition of the installation stand

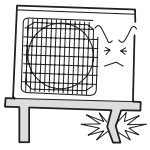

PROHIBITION

Do not pour water onto the unit for cleaning

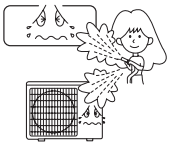

PROHIBITION

Do not place animals or plants in the direct path of the air flow

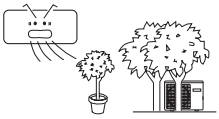

PROHIBITION

Do not place any objects on or climb on the unit.

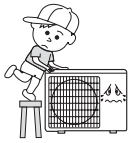

PROHIBITION

Do not place flower vase or water containers on the top of the unit.

PROHIBITION

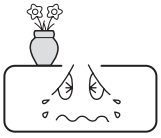

Все каталоги и инструкции здесь: https://splitsystema48.ru/instrukcii-po-ekspluatacii-kondicionerov.html

Parts and Functions

Indoor unit

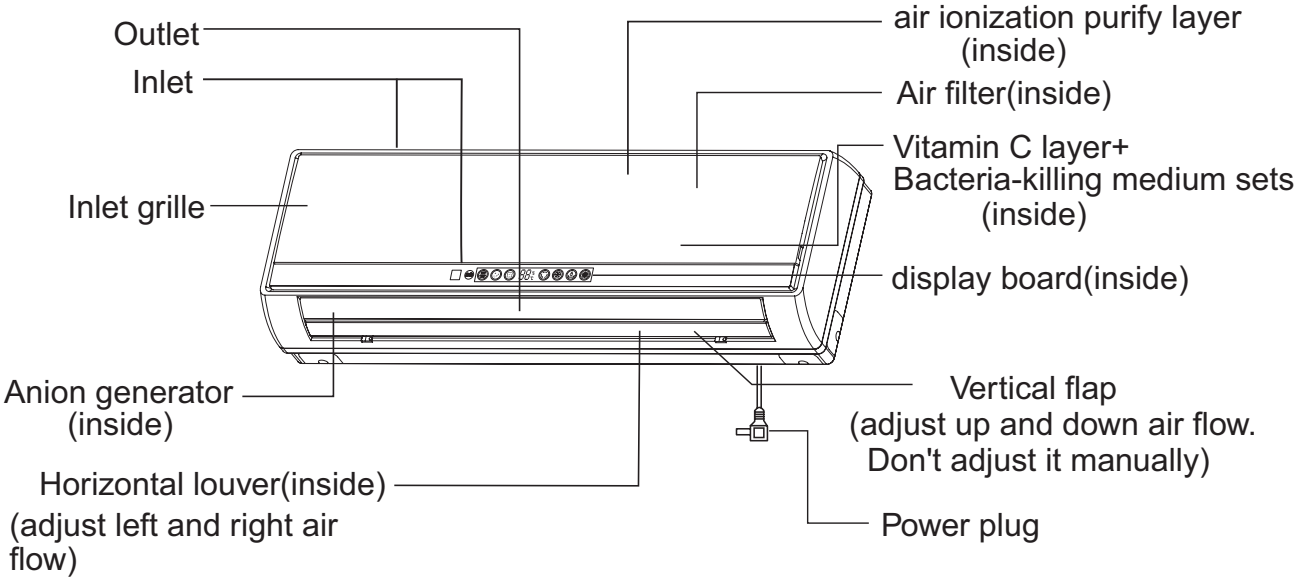

Outdoor unit

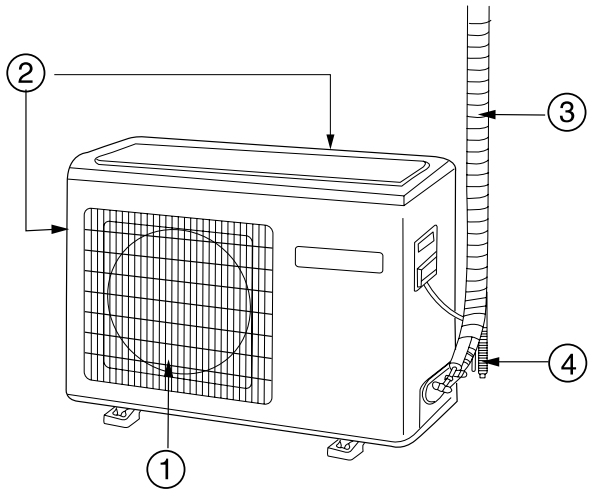

① OUTLET ③ CONNECTING PIPING AND ELECTRICAL WIRING

② INLET ④ DRAIN HOSE

Все каталоги и инструкции здесь: https://splitsystema48.ru/instrukcii-po-ekspluatacii-kondicionerov.html

Parts and Functions

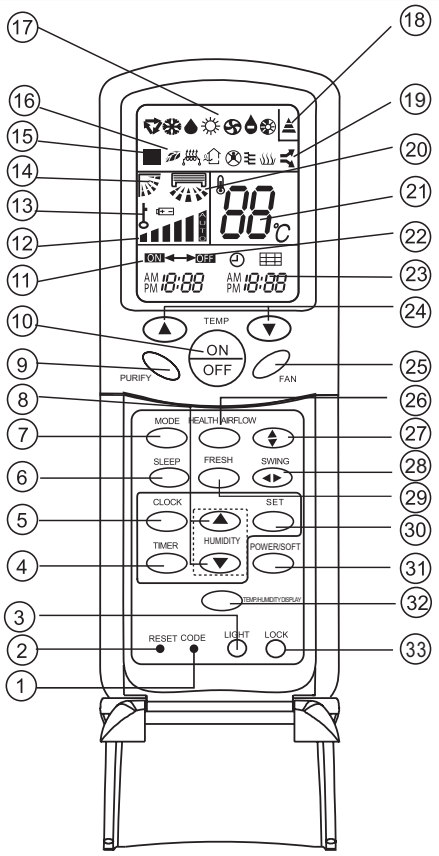

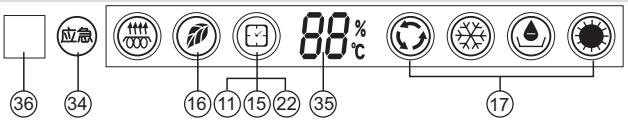

11. TIMER ON display
12. FAN SPEED display

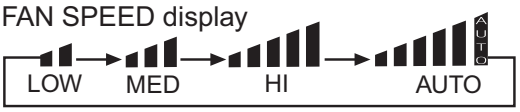

13. LOCK display
14. SWING UP/DOWN display
15. SLEEP display
16. HEALTH display
17. Operation mode display

Operation mode	AUTO	COOL	DRY	HEAT	FAN
Remote controller					
Display board					

18.Singal sending display
19. POWER/SOFT display
20. Left/right air flow display
21. TEMP display
Remote controller: to display the TEMP. setting.
22. TIMER OFF display
23. CLOCK display
24. TEMP button
Used to select your desired temperature.
25. FAN button
Used to select fan speed: LOW,MED, HI, AUTO.
26. HEALTH AIRFLOW button
Used to set the health airflow mode.
27. SWING UP/DOWN button
Used to select up or down air sending direction.
28. SWING LEFT/RIGHT button
Used to select left/right air flow.
29. FRESH button
Use to set fresh air function.
30. SET button
Used to confirm timer and clock settings.
31. POWER/SOFT button
Used to set power/soft function.
32. TEMP./HUMIDITY DISPLAY button
Used for the display panel to choose displaying the actual temperature or the actual humidity at present.
33. LOCK
Used to lock buttons and LCD display. If pressed, the other buttons will be disabled and the lock condition display appears. Press it once again, lock will be canceled and lock condition display disappears.
34. Emergency operation button(touch key)
Used to set emergency operation and test operation.
35. Ambient temp.display
When receiving the remote control signal, display the set temperature and in the rest time the room temperature is displayed and this room temperature is only for reference.
36. Remote signal receiver

1.CODE
Used to select CODE A or B with a press,A or B will be displayed on LCD.
Please select A without special explanation.
2.RESET
When the remote controller appears abnormal, use a sharp pointed article to press this button to reset the remote controller normal.
3.LIGHT button
Control the lightening and extinguishing of the indoor LED display board.
4. TIMER button
Used to select TIMER ON, TIMER OFF, TIMER ON-OFF.
5. CLOCK button
Used to set correct time.
6. SLEEP button
Used to select sleep mode.
7. MODE button

8. HUMIDITY
Used for adjusting humidity or clock time and timed time.
9. Purify button
Used to set air ionization purify and healthy function.
10. ON/OFF button
Used for unit start and stop.

About temperature/humidity display key:
1.under the constant temperature dehumidification mode, for the first time to enter, then the remote controller displays the set temperature, the display panel displays the actual temperature, press this key, the temperature /humidity won't alternate. After adjusting the set temperature, press this key again, the remote controller will display the set temperature or the set humidity, and the display will display the actual temperature or the actual humidity at the same time.
2.Under the other modes, press this key, the display panel will display the actual humidity at present for a certain time, then the actual humidity will automatically switch back to display temperature. The display of the remote controller won't change.

Все каталоги и инструкции здесь: https://splitsystema48.ru/instrukcii-po-ekspluatacii-kondicionerov.html

Parts and Functions

■ Clock Set

When unit is started for the first time and after replacing batteries in remote controller, clock should be adjusted as follows:

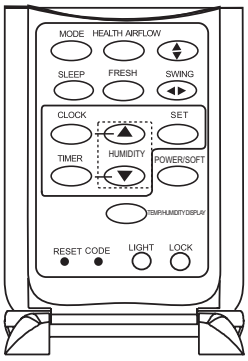

1. Press CLOCK button,"AM" or "PM" flashes.
2. Press△ or▽ to set correct time. Each press will increase or decrease 1 min. If the button is kept depressed, time will change quickly.
3. After time setting is confirmed, press SET, "AM" or "PM" stop flashing, while clock starts working.

■ Remote controller's operation

- When in use, put the signal transmission head directly to the receiver hole on the indoor unit.
- The distance between the signal transmission head and the receiver hole should be within 7m without any obstacle as well.
- Don't throw or knock the remoter controller.
- When electronic-started type fluorescent lamp or change-over type fluorescent lamp or wireless telephone is installed in the room, the receiver is apt to be disturbed in receiving the signals, so the distance to the indoor unit should be shorter.

■ Loading of the battery

Load the batteries as illustrated right
2 R-03 (7#) batteries

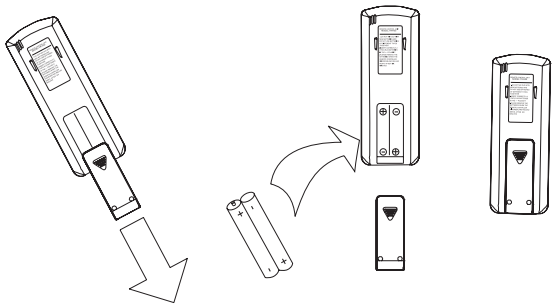

Remove the battery cover:
Slightly press" ⊽ "area and push down the cover as illustrated.

Load the battery:
Be sure that the loading is in line with the "+" / "-". request as illustrated on the bottom of the case.

Put on the cover again.

Confirmation indicator:
After pressing power ON/OFF, if no display, reload the batteries.

Note:
- Full display or unclear display during operation indicates the batteries have been used up. Please change batteries.
- Used two new same-typed batteries when loading.
- If the remote controller can't run normally during operation, please remove the batteries and reload several minutes later.

Hint:
Remove the batteries in case unit won't be in usage for a long period. If there are any display after taking-out, just need to press reset key.

Все каталоги и инструкции здесь: https://splitsystema48.ru/instrukcii-po-ekspluatacii-kondicionerov.html

Operation

Cool Operation

Display board

Remote controller

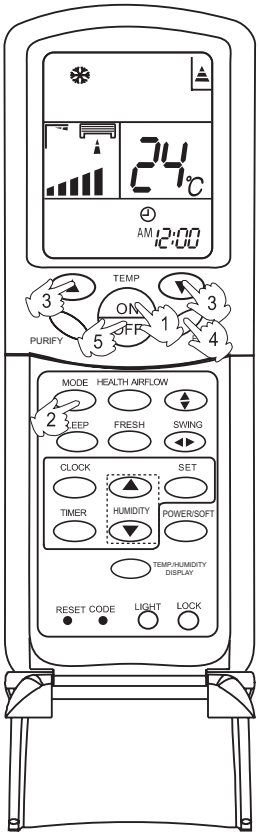

1. Unit start

Press ON/OFF on the remote controller, unit starts.

2.Select operation mode

Press MODE button. For each press, operation mode changes as follows:

Remote controller:

Then Select COOL operation

3.Select temp.setting

Press TEMP. button

△ Every time the button is pressed, temp.setting increase 1°C,if kept depressed, it will increase rapidly

▽ Every time the button is pressed, temp.setting decrease 1°C,if kept depressed, it will decrease rapidly

Select a desired temperature.

4.Fan speed selection

Press FAN button. For each press, fan speed changes as follows:

Remote controller:

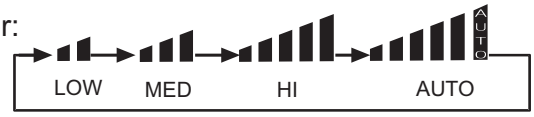

Air conditioner is running under displayed fan speed. When FAN is set to AUTO, the air conditioner automatically adjusts the fan speed according to room temperature.

5.Unit stop

Press ON/OFF button, the unit stops.

Все каталоги и инструкции здесь: https://splitsystema48.ru/instrukcii-po-ekspluatacii-kondicionerov.html

Operation

Auto Operation

Display board

Remote controller

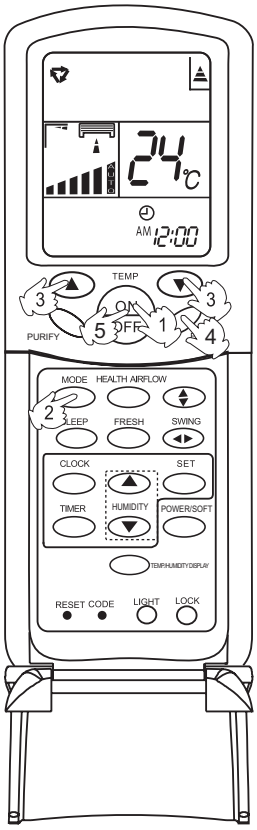

1. Unit start

Press ON/OFF on the remote controller, unit starts.

2.Select operation mode

Press MODE button. For each press, operation mode changes as follows:

Remote controller:

Then Select Auto operation

3.Select temp.setting

Press TEMP. button

△ Every time the button is pressed, temp.setting increase 1°C,if kept depressed, it will increase rapidly.

▽ Every time the button is pressed, temp.setting decrease 1°C,if kept depressed, it will decrease rapidly.

Select a desired temperature.

4.Fan speed selection

Press FAN button. For each press, fan speed changes as follows:

Remote controller:

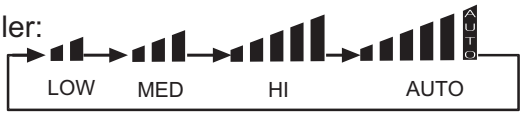

Air conditioner is running under displayed fan speed. When FAN is set to AUTO, the air conditioner automatically adjusts the fan speed according to room temperature.

5.Unit stop

Press ON/OFF button, the unit stops.

About Auto Operation

Under the mode of auto operation, air conditioner will automatically select Cool or Fan operation according to room temperature.

Все каталоги и инструкции здесь: https://splitsystema48.ru/instrukcii-po-ekspluatacii-kondicionerov.html

Operation

HEALTH operation

Display board

Remote controller

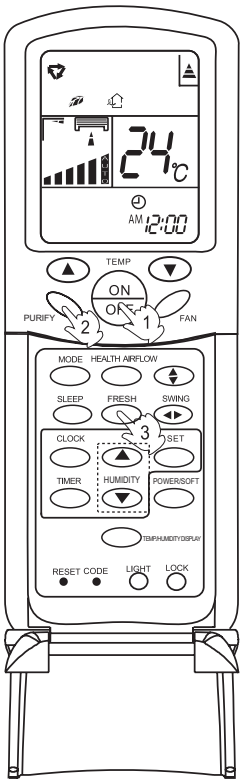

1.Unit start

Press ON/OFF on the remote controller, unit starts.

2.AIP ionizing purification and negative ion functions

Press Purify button. "" is displayed on the remote controller and "" is displayed on the display board . Air conditioner starts air ionization purify and health anion function operation.

For twice press, "" and ""disappear,the operation stops.

3.Change-for-fresh-air function(optional)

Press FRESH button. "" is displayed on the remote controller and "" is displayed on the display board , and the change-for-fresh-air function operation begins.

For twice press, "" and ""disappear,the operation stops.

When indoor fan motor is running, it has air ionization purify and healthy process function.

BRIEF INTRODUCTION TO AIR IONIZATION PURIFY AND HEALTH ANION FUCTION

1.The anion generator in the air conditioner can generate a lot of anion effectively balance the quantity of position and anion in the air and also to kill bacteria and speed up the dust sediment in the room and finally clean the air in the room.

2.The purification function of AIP:
DC high voltage bring high voltage electrostatic field, which ionize air into positive and negative ion. a great deal of positive and negative ion adhere to dust passing by, so the dust become "particle with electric charge". so the dust passing by adheres to the AIP board under the force from the electric field, which purifies the unit.

3.When power off, press the purify button, the Remote controller shows "FAN, low, AIP, and negative ion", and the TIMER function is available.

About UV light degerming function

UV light emitted by the UV light device of the indoor unit catalytically activates the nano TiO2 on the multi-lights touching intermediary, and the degerming effect is highly efficient and lasting.
Note: when the function is running, don't open the inlet grille.

About change-for-fresh-air function(optional)

1.After the change-for-fresh-air function is initiated, the outside air can enter the indoors through the change-for-fresh-air tube thereby keeping the indoor air fresh.

2.Setting the change-for-fresh-air function under the shutdown status:
Under shutdown status, press the fresh key and the remote controller displays the on status of air flow, low wind, and change-for-fresh-air functions, and now can set the timing open, timing close and time control switch. Press on/off button to cancel the change-for-fresh-air function.

Все каталоги и инструкции здесь: https://splitsystema48.ru/instrukcii-po-ekspluatacii-kondicionerov.html

Operation

Dry Operation

Display board

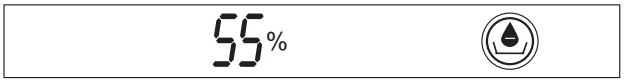

Remote controller

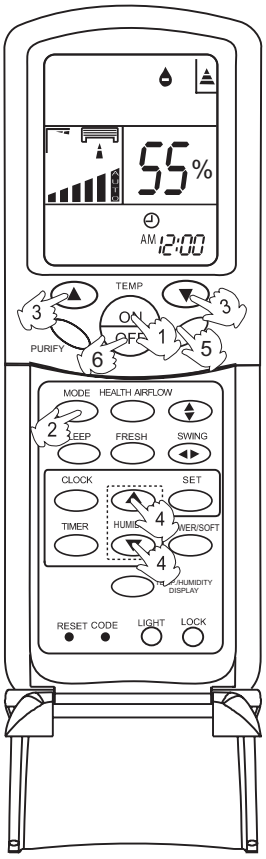

1. Unit start

Press ON/OFF on the remote controller, unit starts.

2.Select operation mode

Press MODE button. For each press, operation mode changes as follows:

Remote controller:

Then Select DRY operation

3.Select temp.setting

Press TEMP. button

△ Every time the button is pressed, temp.setting increase 1°C,if kept depressed, it will increase rapidly.

▽ Every time the button is pressed, temp.setting decrease 1°C,if kept depressed, it will decrease rapidly.

Select a desired temperature.

4.Setting humidity

Under the state of constant temperature dehumidification, press humidity setting key

△ Each time, the set humidity will increase by 5%, if keeping press it, the humidity will increase rapidly.

▽ Each time, the set humidity will decrease by 5%, if keeping press it, the humidity will decrease rapidly.

The controllable humidity range is available from 35% to 70%.

5.Fan speed selection

Press FAN button. For each press, fan speed changes as follows:

Remote controller:

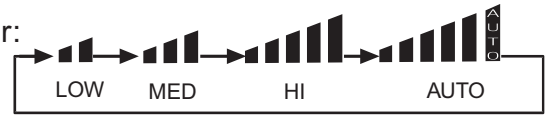

Air conditioner is running under displayed fan speed.
In DRY mode, when room temperature becomes lower than temp.setting+2°C,unit will run intermittently at LOW speed regardless of FAN setting.

6.Unit stop

Press ON/OFF button, the unit stops.

About constant temperature dehumidification operation:

when constant temperature dehumidification runs, if the room temperature is 3°C higher than the set temperature, the air conditioner will automatically decrease the temperature and dehumidify; if the temperature deviation is less than 3°C, the air conditioner will automatically keep the temperature and dehumidify, so these can make the temperatures of the air inside and outside near to each other and avoid the cold airflow blowing people.

Все каталоги и инструкции здесь: https://splitsystema48.ru/instrukcii-po-ekspluatacii-kondicionerov.html

Operation

Fan Operation

Display board

24℃

Remote controller

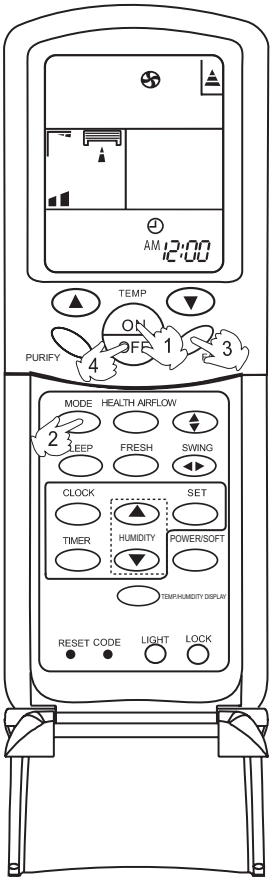

1. Unit start

Press ON/OFF on the remote controller, unit starts.

2.Select operation mode

Press MODE button. For each press, operation mode changes as follows:

Remote controller:

Then Select FAN operation

3.Fan speed selection

Press FAN button. For each press, fan speed changes as follows:

Remote controller:

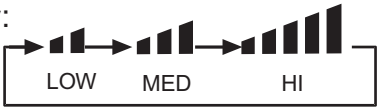

4.Unit stop

Press ON/OFF button, the unit stops.

About FAN operation

In FAN operation mode, the unit will not operate in COOL mode but only in FAN mode ,AUTO is not available in FAN mode.And temp.setting is disabled. In FAN mode,SLEEP and POWER/SOFT operation is not available.

Все каталоги и инструкции здесь: https://splitsystema48.ru/instrukcii-po-ekspluatacii-kondicionerov.html

Operation

Heat Operation

Remote controller

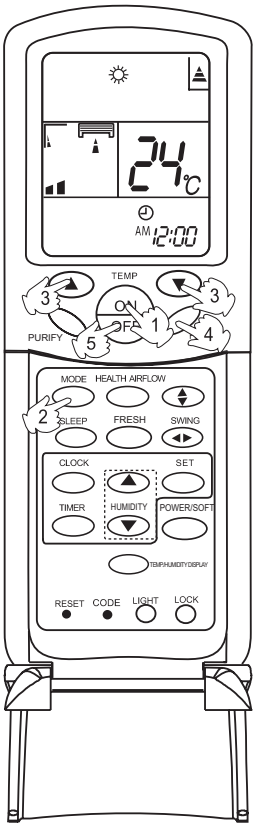

1. Unit start

Press ON/OFF on the remote controller, unit starts.

2.Select operation mode

Press MODE button. For each press, operation mode changes as follows:

Remote controller:

Then Select HEAT operation

3.Select temp.setting

Press TEMP. button

△ Every time the button is pressed, temp.setting increase 1°C,if kept depressed, it will increase rapidly

▽ Every time the button is pressed, temp.setting decrease 1°C,if kept depressed, it will decrease rapidly

Select a desired temperature.

4.Fan speed selection

Press FAN button. For each press, fan speed changes as follows:

Remote controller:

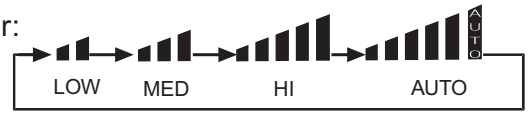

Air conditioner is running under displayed fan speed

IN HEAT mode, warm air will blow out after a short period of the time due to cold-draft prevention function.

When FAN is set to AUTO, the air conditioner automatically adjusts the fan speed according to room temperature.

5.Unit stop

Press ON/OFF button, the unit stops.

Все каталоги и инструкции здесь: https://splitsystema48.ru/instrukcii-po-ekspluatacii-kondicionerov.html

Operation

Air Flow Direction Adjustment

1.Status display of air sending

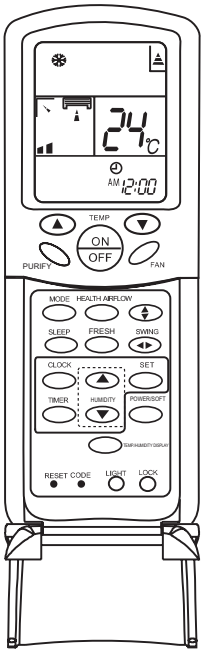

Vertical flap

Pos.1

Pos.2

Pos.3

Pos.4

Pos.5

Pos.6 (Auto swing)

Horizontal louvers

Pos.1

Pos.2

Pos.3

Pos.4

Pos.5

Pos.6

Pos.7

Pos.8

2.Up and down air flow direction

For each press of button, air flow direction on remote controller displays as follows according to different operation modes:

COOL/DRY/FAN:
remote controller: → Pos.1 → Pos.2 → Pos.3 → Pos.4 → Pos.6

HEAT:
remote controller: → Pos.5 → Pos.4 → Pos.3 → Pos.2 → Pos.1 → Pos.6

AUTO:
remote controller: → Pos.1 → Pos.2 → Pos.3 → Pos.4 → Pos.5 → Pos.6

The vertical flap will swing according to the above positions

3.Left and right air flow direction

For each press of button, remote controller displays as follows :

remote controller:

→ Pos.1 → Pos.2 → Pos.3 → Pos.4 → Pos.5 → Pos.6 → Pos.7 → Pos.8

The horizontal louvers will swing according to the above positions.

Note:When restart after remote turning off, the remote controller will automatically memorize the previous set swing position.

Все каталоги и инструкции здесь: https://splitsystema48.ru/instrukcii-po-ekspluatacii-kondicionerov.html

Operation

Sleep Operation

Display board

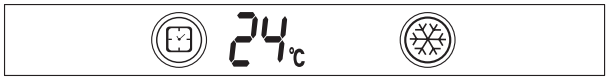

Before going to bed, you can simply press the SLEEP button and unit will operate in SLEEP mode and bring you a sound sleep.
Use of SLEEP function
After the unit starts, set the operation status, then press SLEEP button before which the clock must be adjusted and time being set.
Operation Mode
1. In COOL,DRY mode
1 hours after SLEEP mode starts, temp. will become 1°C higher than temp. setting. After another 1 hours, temp. rises by 1°C further. The unit will run for further 6 hours then stops. Temp. is higher than temp. setting so that room temperature won't be too low for your sleep.

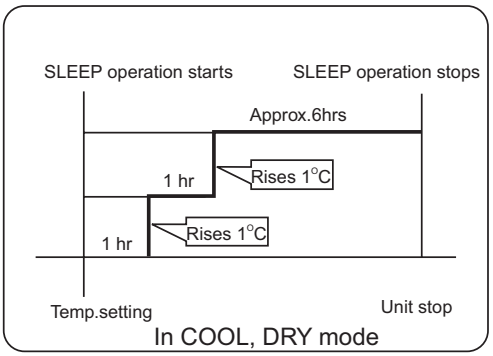

In COOL, DRY mode

Remote Controller

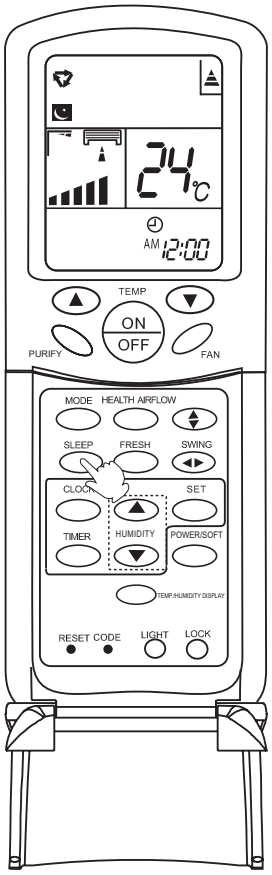

2. In AUTO mode
The unit operates in corresponding sleep mode adapted to the automatically selected operation mode.
3. In FAN mode
It has no SLEEP function.
4.Set the wind speed change when sleeping
If the wind speed is high or middle before setting for the sleep, set for lowing the wind speed after sleeping.
If it is low wind, no change.
5.Note to the power failure resume:
press the sleep button ten times in five seconds and enter this function after hearing four sounds. And press the sleep button ten times within five seconds and leave this function after hearing two sounds.

NOTE: With the power failure resume, when setting the TIMER ON, TIMER OFF and TIMER ON/OFF, it's memorized as shutdown status when resuming after power out.

Все каталоги и инструкции здесь: https://splitsystema48.ru/instrukcii-po-ekspluatacii-kondicionerov.html

Operation

Timer On/Off Operation

Display board

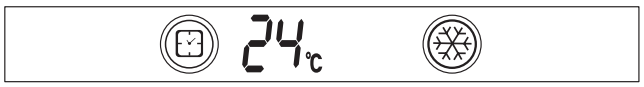

Remote Controller

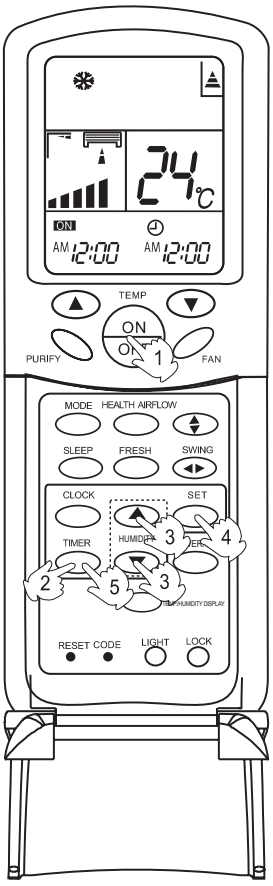

Set clock correctly before starting TIMER operation.

1. After unit starts, select your desired operation mode
   Operation mode will be displayed on LCD.
2. Timer mode selection
   Press TIMER button to change TIMER mode. Every time the button is pressed, display changes as follows:
   Remote controller:

Then select your desired TIMER mode (TIMER ON or TIMER OFF). " ON "or " OFF "will flash.

3.Time setting

Press HOUR △/ ▽ button.

△ Every time the button is pressed, time setting increases 1 min, if kept depressed, it will increase rapidly.

▽ Every time the button is pressed, time setting decreases 1 min, if kept depressed, it will decrease rapidly.

It can be adjusted within 24 hours.

4.Confirming your setting

After setting correct time, press SET button to confirm " ON "or" OFF "on the remote controller stops flashing.
Time displayed: Unit starts or stops at x hour x min. (TIMER ON or TIMER OFF).

5.Cancel TIMER mode

Just press TIMER button several times until TIMER mode disappears.

Hints:
After replacing batteries or a power failure happens, time setting should be reset.
Remote controller possesses memory function, when use TIMER mode next time, just press SET button after mode selecting if time setting is the same as previous one.

Все каталоги и инструкции здесь: https://splitsystema48.ru/instrukcii-po-ekspluatacii-kondicionerov.html

Operation

Timer On-Off Operation

Display board

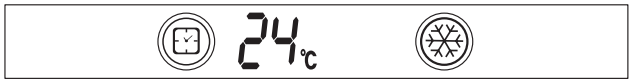

Remote Controller

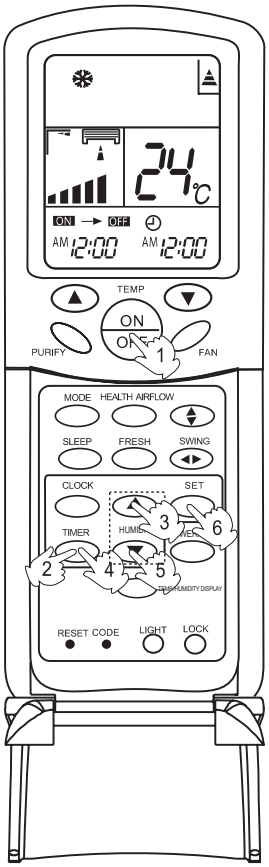

Set clock correctly before starting TIMER operation.

1. After unit starts, select your desired operation mode
   Operation mode will be displayed on LCD.
2. Timer mode selection
   Press TIMER button to change TIMER mode. Every time the button is pressed, display changes as follows:
   Remote controller:

   Then select your desired TIMER mode (TIMER ON - OFF).
   " ON "will flash.

3. Time setting
   Press HOUR △ / ▽ button.
   △ Every time the button is pressed, time setting increases 1 min, if kept depressed, it will increase rapidly.
   ▽ Every time the button is pressed, time setting decreases 1 min, if kept depressed, it will decrease rapidly.
   It can be adjusted within 24 hours.

4. Timer confirming for TIMER ON
   After setting correct time, press TIMER button to confirm
   " ON " on the remote controller stops flashing.
   " OFF " starts flashing.
   Time displayed: Unit starts or stops at x hour x min.

5. Time setting for TIMER OFF
   Just press HOUR button ,follow the same procedure in "Time setting for TIMER ON"

6. Time confirming for TIMER OFF
   After time setting,press SET button to confirm.
   " OFF " on the remote controller stops blinking.
   Time displayed:Unit stops at x hour x min.

To cancel TIMER mode
Just press TIMER button several times until TIMER de disappears.
According to the Time setting sequence of TIMER ON or TIMER OFF, either Start-Stop or Stop-Start can be achieved.

Все каталоги и инструкции здесь: https://splitsystema48.ru/instrukcii-po-ekspluatacii-kondicionerov.html

Operation

POWER/SOFT Operation

Remote controller

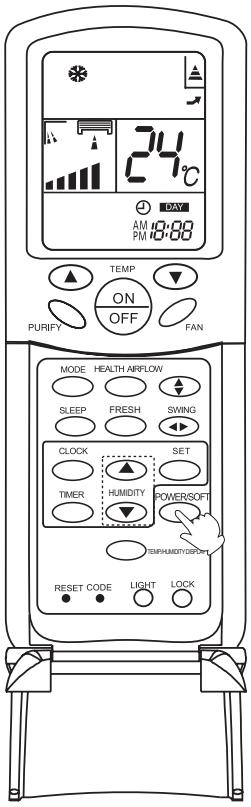

POWER Operation

When you need rapid cooling, you can use this funciton.

Selecting of POWER operation

Press POWER/SOFT button. Every time the button is pressed,display changes as follows:

Stop the display at" ↗ ".

In POWER operation status:

In COOL mode, fan speed automatically runs in HI mode for 15 min then returns to original status setting.

To cancel POWER operation

Press POWER/SOFT button twice ,POWER/SOFT disappears.

SOFT Operation

You can use this function when silence is needed for rest or reading.

Selecting of SOFT operation

Press POWER/SOFT button. Every time the button is pressed,display changes as follows:

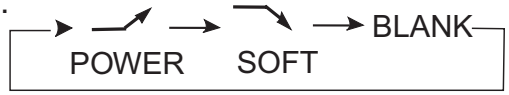

Stop the display at " ↘ ".

In SOFT operation mode, fan speed automatically takes"LOW"

To cancel SOFT operation

Press POWER/SOFT button twice ,POWER/SOFT disappears.

Hints:

During POWER operation, in rapid COOL mode, the room will show inhomogeneous temperature distribution.

Long period SOFT operation will cause effect of not too cool.

Все каталоги и инструкции здесь: https://splitsystema48.ru/instrukcii-po-ekspluatacii-kondicionerov.html

Operation

Health airflow Operation

Remote controller

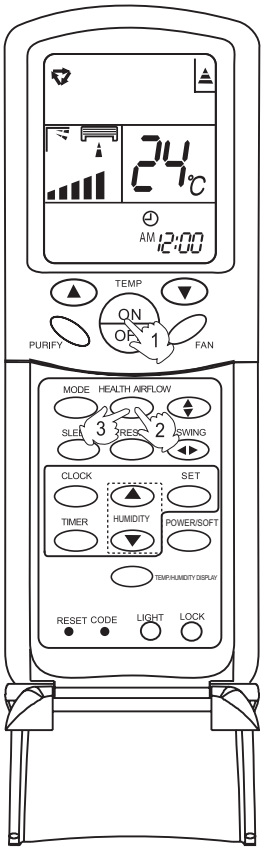

1.Press ON/OFF to starting

The liquid crystal will display the working state of last time (Except timer, sleeping, power/soft and health airflow). Setting the comfort work conditions.

2.The setting of health airflow function

1).Press the button of health airflow, appears on the display. The nether inlet and outlet grills of the air conditioner are closed and the airflow is blown horizontally from the above inlet and outlet grills. Avoid the strong airflow blows direct to the body.

2).Press the button of health airflow again, appears on the display. The above inlet and outlet grills of the air conditioner are closed and the airflow is blown vertically from the nether inlet and outlet grills. Avoid the strong airflow blows direct to the body.

3.The cancel of the health airflow function

Press the button of health airflow again, both the inlet and outlet grills of the air conditioner are opened, and the unit goes on working under the condition before the setting of health airflow function.

After stopping, the outlet grille will close automatically.

Notice: Cannot pull direct the outlet grille by hand. Otherwise, the grille will run incorrectly. If the grille is not run correctly, stop for a minute and then start, adjusting by remote controller.

Note:

1 .After setting the health airflow function, the position of inlet and outlet grills is fixed.

2.In heating, it is better to select the mode.

3.In cooling, it is better to select the mode.

4.In cooling and dry, using the air conditioner for a long time under the high air humidity, a phenomenon falling drips of water occurs at the outlet grille .

5.Select the appropriate fan direction according to the actual conditions.

Все каталоги и инструкции здесь: https://splitsystema48.ru/instrukcii-po-ekspluatacii-kondicionerov.html

Operation

Emergency and Test Operation

Emergency operation:

- Use this operation only when the remote controller is defective or lost.
- When the emergency operation switch is pressed,the" Pi "sound is heard once, which means the start of this operation.
- In this operation, the system automatically selects the operation modes, cooling or fan, according to the room temperature.

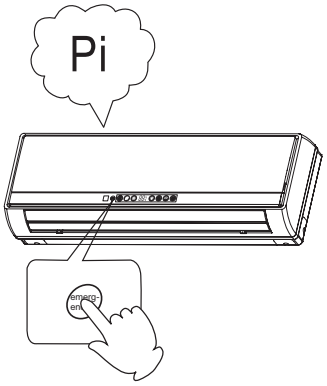

Temperature	Operation mode	Designated temperature	Timer mode	Air flow
ABOVE 21°C	COOLING	24°C	NO	AUTOMATIC
BELOW 21°C	FAN	24°C	NO	AUTOMATIC

- It is not possible to operate in dry mode.

Test operation:

Test operation switch is the same as emergency switch.

- Use this switch in the test operation when the room temperature is below 16°C, do not use it in the normal operation.
- Continue to press the test operation switch for more than 5 seconds. After you hear the "Pi" sound twice, release your finger from the switch: the cooling operation starts with the air flow speed "Hi".
- After 30 minutes, test operation ends automatically.

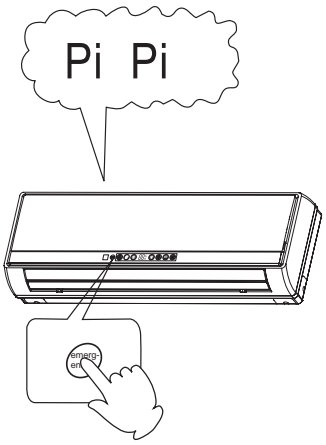

Removal of the restriction of emergency or test operation

- Press the emergency operation switch once more, or manipulate through the remote controller; the "Pi" sound, the emergency or test operation is terminated.
- When the remote controller is manipulated, it gets the system back to the normal operation mode.

Все каталоги и инструкции здесь: https://splitsystema48.ru/instrukcii-po-ekspluatacii-kondicionerov.html

Maintenance

For Smart Use of The Air Conditioner

Setting of proper room temperature

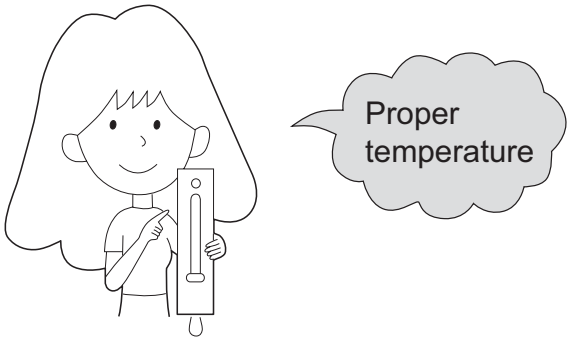

Do not block the air inlet or outlet

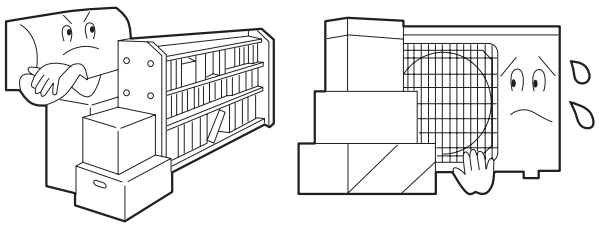

Close doors and windows during operation

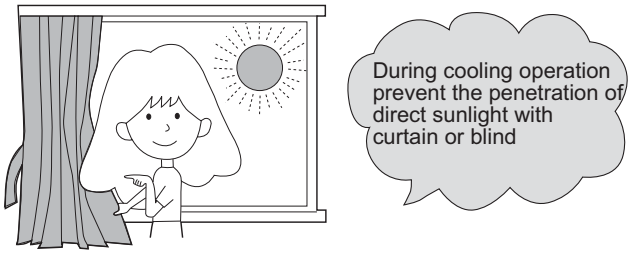

Use the timer effectively

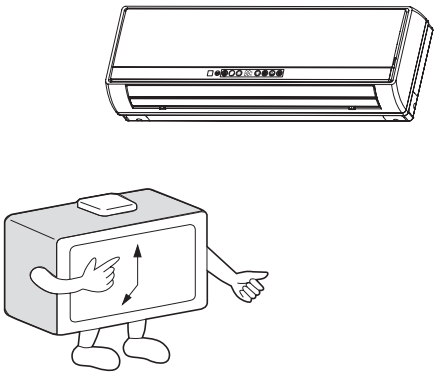

If the unit is not to be used for a long time, turn off the power supply main switch.

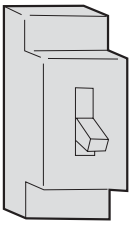

OFF

Use the louvers effectively

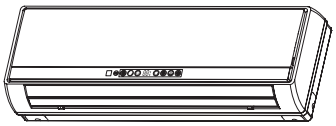

Все каталоги и инструкции здесь: https://splitsystema48.ru/instrukcii-po-ekspluatacii-kondicionerov.html

Maintenance

For Smart Use of The Air Conditioner

⚠ WARNING

Before maintenance,be sure to turn off the system and the circuit breaker.

Remote Controller

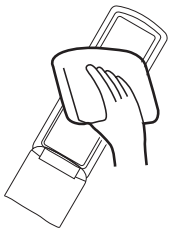

Do not use water, wipe the controller with a dry cloth.Do not use glass cleaner or chemical cloth.

Indoor Body

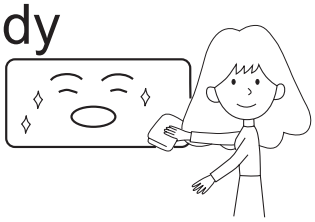

Wipe the air conditioner by using a soft and dry cloth.For serious stains,use a neutral detergent diluted with water.Wring the water out of the cloth before wiping.then wipe off the detergent completely.

Do not use the following for cleaning

Gasoline,benzine, thinner or cleanser may damage the coating of the unit.

Hot water over 40°C(104°F) may cause discoloring or deformation.

Air Filter cleaning

1 Open the inlet grille by pulling it upward.

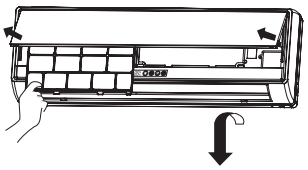

2 Remove the filter.

Push up the filter's center tab slightly until it is released from the stopper, and remove the filter downward.

3 Clean the filter.

Use a vacuum cleaner to remove dust, or wash the filter with water.After washing, dry the filter completely in the shade.

4 Attach the filter.

Attach the filter correctly so that the "FRONT" indication is facing to the front.Make sure that the filter is completely fixed behind the stopper.If the right and left filters are not attached correctly, that may cause defects.

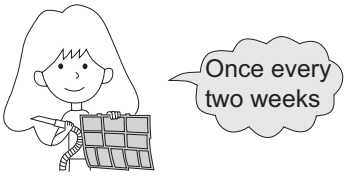

5 Close the inlet grille.

Все каталоги и инструкции здесь: https://splitsystema48.ru/instrukcii-po-ekspluatacii-kondicionerov.html

Maintenance

The installation and cleanout AIP layer, VC layer + Bacteria-killing medium sets

1.Open the Inlet Grille

The inlet grill is supported by its top plate at the right side.

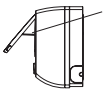

2.Detach the standard air filter

Push up the filter's center tab slightly until it is released from the stopper, and remove the filter downward.

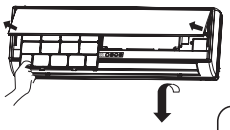

3.Take the VC layer + Bacteria-killing medium sets

Take out Take the VC layer or the Bacteria-killing medium sets from the filter. Push the bottom frame of AIP layer, and push up the handle at the same time in order take out the AIP layer board in turns.

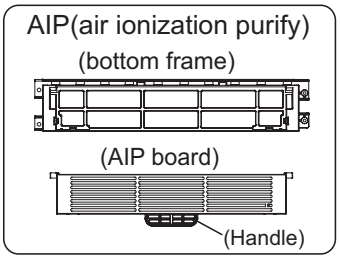

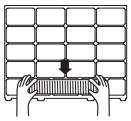

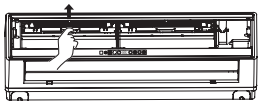

Note:the green aspect of the bacteria-killing medium air purifying filter will face outside, the white aspect will face to the machine. The yellow aspect of the VC layer will face outside, the white aspect will face to the machine.

4. The installation of AIP layer,VC layer + Bacteria-killing medium sets (must be installed)

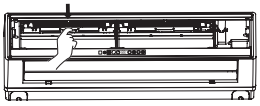

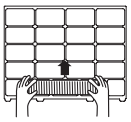

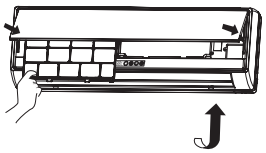

5.Close the Inlet Grille

Put down the inlet grill's top plate, and close the inlet grill.

➢ Common sense:

- In order to keep the AIP layer having a highly work effect ,it should be cleaned regularly or aperiodically just according to the working environment.
  1. Turn off the A/C electricity supply and make sure that AIP layer is not working.Then clean the AIP layer after turning off it five minutes later.
  2. Please brush off the dust on AIP board,then steep it into cleaning agent water and wash it.
  3. After cleaning AIP board pleas put it on a dry place until it is totally dry.
  4. Ensure AIP board is dry enough then install it in the its position along the slide way . Make sure it is as before and could work well.
- The AIP layer will be replaced in fixed time. In normal family, it will be replaced every 6 months.
- In the use, please note to clean the filter frequently (take off the back suction cleaner or lightly pat it) to avoid the operating effect is lowered due to the dust covering the filter. AIP layer and bacteria-killing medium filter is strictly prohibited from being cleaned by water.
  The the bacteria-killing medium filter not in use should be stored in shade, cool and dry place.
  Please don't expose it to the sunlight for a long time otherwise the degerming performance will drop.

Все каталоги и инструкции здесь: https://splitsystema48.ru/instrukcii-po-ekspluatacii-kondicionerov.html

Maintenance

To Keep Your Air conditioner in Good Condition after Season.

1 Operate in cooling mode for 2-3 hours.

To prevent breeding mold or bad smell, be sure to operate at the designated temperature or 30°C,cooling mode and High speed fan mode for 2-3 hours.

2 Put off the power supply cord.

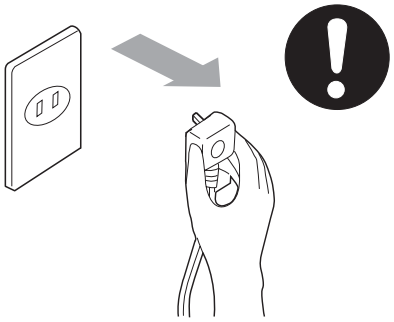

3 Cleaning the body.

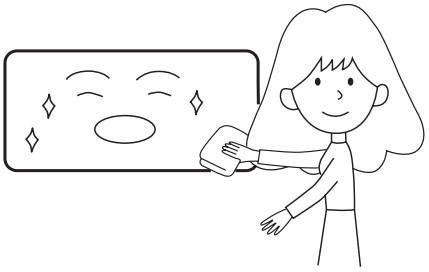

4 Take out the batteries from the wireless remote controller.

Все каталоги и инструкции здесь: https://splitsystema48.ru/instrukcii-po-ekspluatacii-kondicionerov.html

Maintenance

Before Setting in High season

1 Cleaning the standard air filter.

Operation without filter may cause troubles.Be sure to attach both right and left filters prior to the operation. Each of them are of different shapes.

2 Connecting the earthing cable.

⚠ Caution

- Incomplete earthing may cause an electric shock.

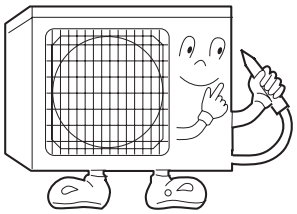

EARTHING

3 Do not block the air inlet or outlet.

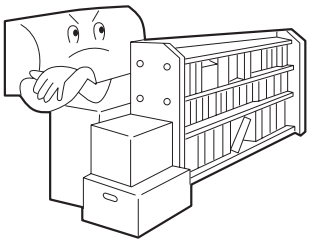

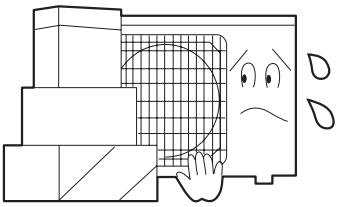

4 Plug-in

⚠ Caution

- After brush away dust at the plug, insert the plug of the power supply cord into the outlet completely.In case of suing exclusive circuit breaker,switch on the circuit breaker.

NO WET HAND

Все каталоги и инструкции здесь: https://splitsystema48.ru/instrukcii-po-ekspluatacii-kondicionerov.html

Trouble shooting

Before asking for service, check the following first.

	Phenomenon	Cause or check points
Normal Performance inspection	The system does not restart immediately.	• When unit is stopped, it won't restart immediately until 3 minutes have elapsed to protect the system. • When the electric plug is pulled out and reinserted, the protection circuit will work for 3 minutes to protect the air conditioner.
	Noise is heard:	• During unit operation or at stop, a swishing or gurgling noise may be heard. At first 2-3 minutes after unit start, this noise is more noticeable. (This noise is generated by refrigerant flowing in the system.) • During unit operation, a cracking noise may be heard. This noise is generated by the casing expanding or shrinking because of temperature changes. • Should there be a big noise from air flow in unit operation, air filter may be too dirty.
	Smells are generated.	• This is because the system circulates smells from the interior air such as the smell of furniture, cigarettes.
	Mist or steam are blown out.	• During COOL or DRY operation, indoor unit may blow out mist. This is due to the sudden cooling of indoor air.
Multiple check	Does not work at all.	• Is power plug inserted? • Is there a power failure? • Is fuse blown out?
	Poor cooling	• Is the air filter dirty? Normally it should be cleaned every 15 days. • Are there any obstacles before inlet and outlet? • Is temperature set correctly? • Are there some doors or windows left open? • Is there any direct sunlight through the window during the cooling operation?(Use curtain) • Are there too much heat sources or too many people in the room during cooling operation?

Все каталоги и инструкции здесь: https://splitsystema48.ru/instrukcii-po-ekspluatacii-kondicionerov.html

7 Service Diagnosis

7.1 Caution for Diagnosis

The operation lamp flashes when any of the following errors is detected.

1. When a protection device of the indoor or outdoor unit is activated or when the thermistor malfunctions, disabling equipment operation.
2. When a signal transmission error occurs between the indoor and outdoor units.

In either case, conduct the diagnostic procedure described in the following pages.

Location of operation lamp

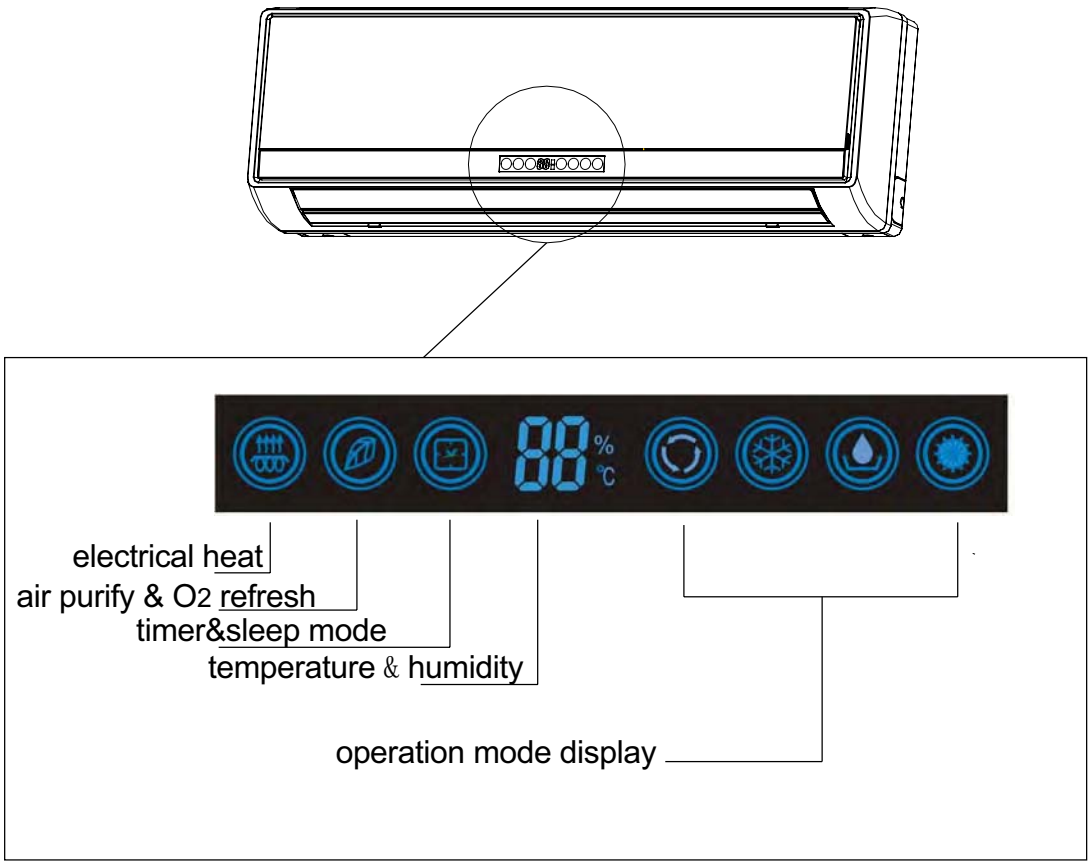

Все каталоги и инструкции здесь: https://splitsystema48.ru/instrukcii-po-ekspluatacii-kondicionerov.html

7.2.Problem Symptoms and Measures

Symptom	Check Item	Details of Measure
None of the units operates	Check the power supply.	Check to make sure that the rated voltage is supplied.
	Check the indoor PCB	Check to make sure that the indoor PCB is broken
Operation sometimes stops.	Check the power supply.	A power failure of 2 to 10 cycles can stop air conditioner operation.
Equipment operates but does not cool, or does not heat (only for heat pump)	Check for faulty operation of the electronic expansion valve.	Set the units to cooling operation, and compare the temperatures of the liquid side connection pipes of the connection section among rooms to check the opening and closing operation of the electronic expansion valves of the individual units.
	Diagnosis by service port pressure and operating current.	Check for insufficient gas.
Large operating noise and vibrations	Check the installation condition.	Check to make sure that the required spaces for installation (specified in the Technical Guide, etc.) are provided.

Все каталоги и инструкции здесь: https://splitsystema48.ru/instrukcii-po-ekspluatacii-kondicionerov.html

7.3. Fault Display outdoor unit

If outdoor unit faults, the alarm indicator lamp（LED1 on the outdoor mainboard ）will blink and blink frequency is 1HZ，Time interval between blink cycles is 3s.

Alarm indicator lamp is off when there is no fault.

Fault Description	Outdoor led blink times
Outdoor EEPROM Fault	1
U phase over current	3
V phase over current	16
W phase over current	17
Power Supply Over voltage	6
Power Supply Under voltage	20
Compressor startup fault	7
Compressor lack phase	19
PFC fault	24
Compressor over current	14
PFCcircuit or voltage	29

7.3.1 Outdoor troubleshooting

	Fault Description	Possible Reasons	Details of Measure
1	Outdoor EEPROM Fault	Faulty outdoor unit PCB	Chang the outdoor unit PCB
2	U phase over current	1) the IPM module is broken	1)change the new module
3	V phase over current	The same to U phase over current	The same to U phase over current
4	W phase over current	The same to U phase over current	The same to U phase over current
5	Power Supply Over voltagve	1)the power supply is too high 2) the IPM module is broken	1)check the power 2)change the new module
6	Power Supply Under voltage	1)the power supply is too low 2) the IPM module is broken	1)check the power 2)change the new module
7	Compressor startup fault	The IPM module is broken	Change the new one
8	Compressor lack phase	The IPM module is broken	Change the new one
9	PFC fault	The IPM module is broken	Change the new module
10	Compressor over current	The IPM module is broken	Change the new module
11	PFCcircuit or voltage fault	The IPM module is broken	Change the new module

Detailed Troubleshooting for 5、 6

Power Supply Over or under voltagve fault

Method of Malfunction Detection	An abnormal voltage rise or fall is detected by checking the specified voltage detection circuit.
Malfunction Decision Conditions	An voltage signal is fed from the voltage detection circuit to the microcomputer

Все каталоги и инструкции здесь: https://splitsystema48.ru/instrukcii-po-ekspluatacii-kondicionerov.html

Supposed Causes	■ Supply voltage not as specified ■ the IPM module is broken ■ the outdoor PCB is broken

Troubleshooting ＊ Caution Be sure to turn off power switch before connect or disconnect connector, or else parts damage may be occurred.

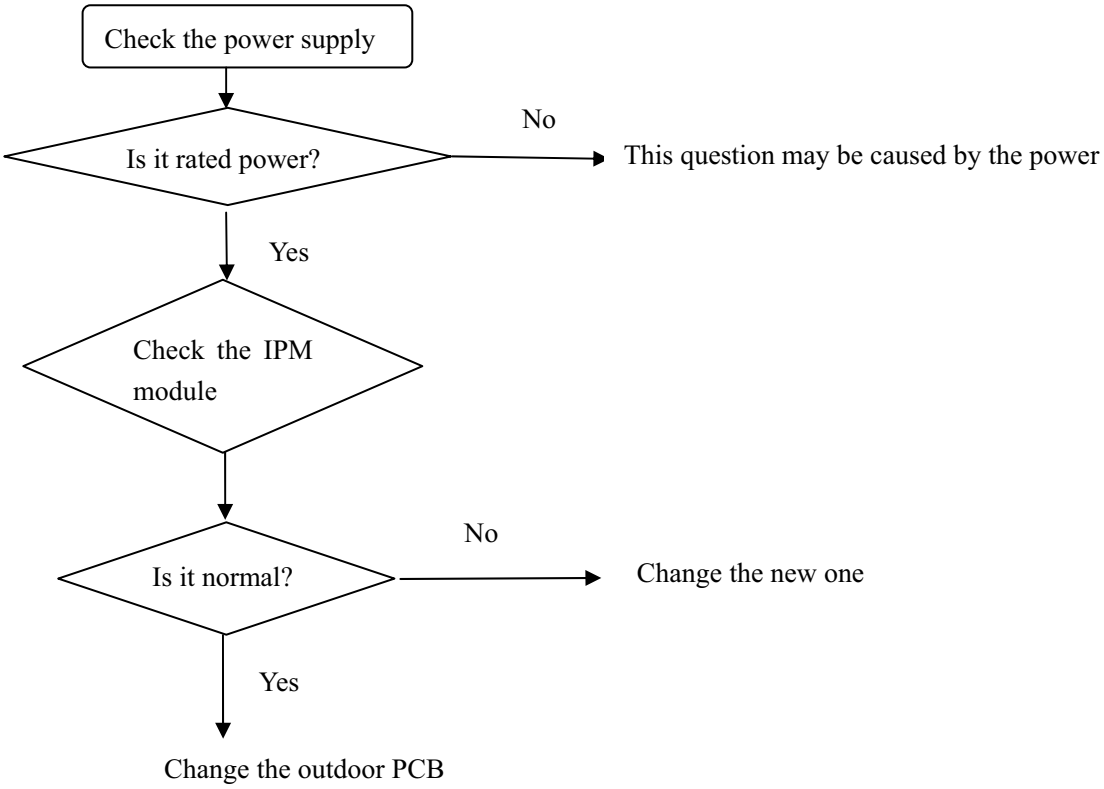

About how to check the IPM module,please refer to IPM protection fault

Все каталоги и инструкции здесь: https://splitsystema48.ru/instrukcii-po-ekspluatacii-kondicionerov.html

7.4.Error Codes and Description indoor display

	Code Indication	Description	Reference page
Indoor unit	E1	Room temperature sensor failure	74
	E2	Heat-exchange sensor failure	74
	E10	Humidity sensor malfunction	75
	E14	Indoor fan motor malfunction	76
Outdoor unit	F1	The protection of IPM	78
	F3	Communication fault between the IPM and outdoor PCB	79
	F4	Overheat protection for exhaust temperature	82
	F6	Ambient temperature sensor failure	81
	F7	Suction temperature sensor failure	81
	F21	Frost-removing temperature sensor failure	81
	F25	Exhaust temperature sensor failure	81
System	E7	Communication fault between the indoor and outdoor units	84
	E9	High work-intense protection	86

The code indication that is listed above is the main fault

Все каталоги и инструкции здесь: https://splitsystema48.ru/instrukcii-po-ekspluatacii-kondicionerov.html

7.4.1Thermistor or Related Abnormality (indoor unit)

Indoor Display	E1 E2
Method of Malfunction Detection	the temperatures detected by the thermistors are used to determine thermistor errors
Malfunction Decision Conditions	when the thermistor input is more than 4.92V or less than 0.08V during compressor operation. * Note: The values vary slightly in some models
Supposed Causes	■ Faulty connector connection ■ Faulty thermistor ■ Faulty PCB

Troubleshooting * Caution Be sure to turn off power switch before connect or disconnect connector, or else parts damage may be occurred.

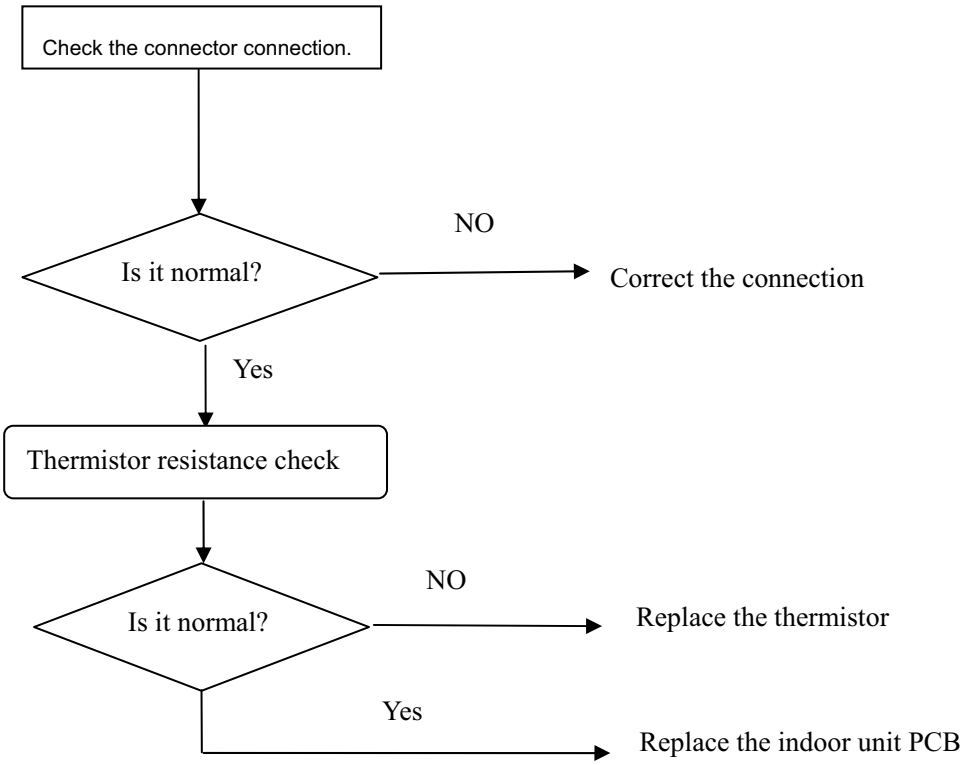

Thermistor resistance check method:

Remove the connector of the thermistor on the PCB, and measure the resistance of thermistor using tester.The relationship between normal temperature and resistance is shown in the value of indoor thermistor.

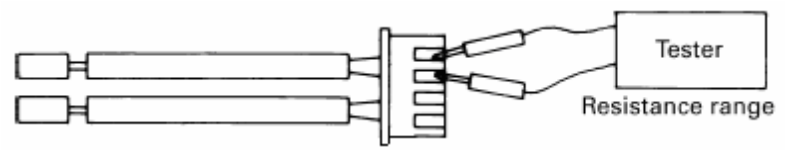

notes:

E1: Room temperature sensor failure
E2: Indoor heat-exchange sensor failure

Все каталоги и инструкции здесь: https://splitsystema48.ru/instrukcii-po-ekspluatacii-kondicionerov.html

7.4.2 Humidity sensor or Related Abnormality

Indoor Display **E10**

Method of Malfunction Detection: the humidity detected by the sensor are used to determine humidity sensor errors

Malfunction Decision Conditions: when the sensor input is more than 3V or less than 0.5V during compressor operation.

＊ Note: The values vary slightly in some models

Supposed Causes:
- ■ Faulty connector connection
- ■ Faulty thermistor
- ■ Faulty PCB

Troubleshooting ＊ Caution Be sure to turn off power switch before connect or disconnect connector, or else parts damage may be occurred.

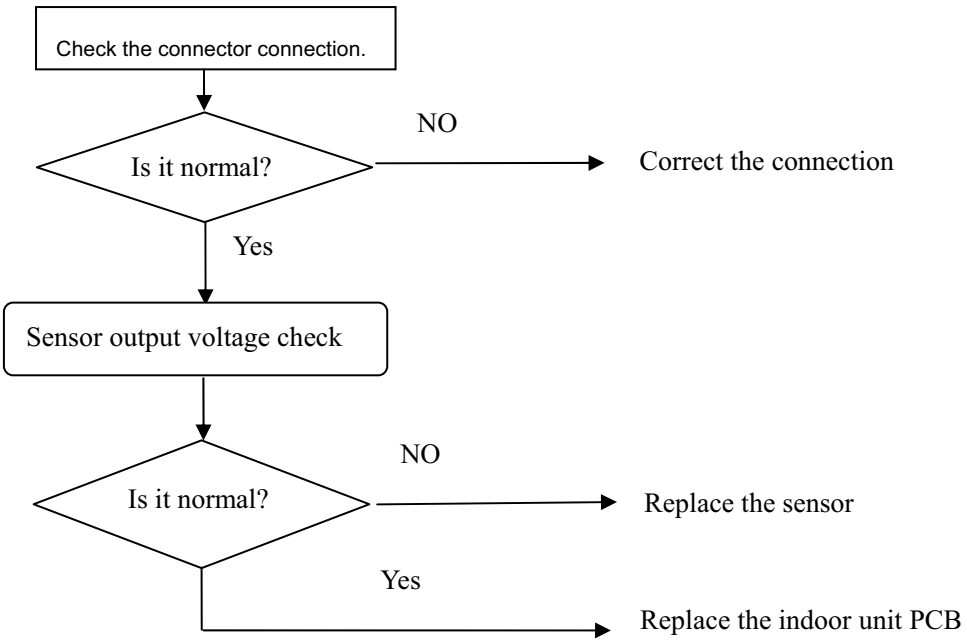

Sensor output voltage check method:

Remove the connector of the sensor on the PCB, and measure the voltage of sensor using tester.The relationship between normal temperature and output voltage is shown in the graph below.

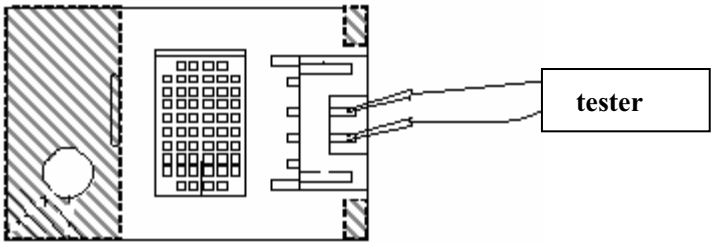

Temp.	Relative Humidity （%RH）							
	20	30	40	50	60	70	80	90
5℃	0.879V	1.375V	1.724V	2.012V	2.211V	2.385V	2.561V	2.754V
25℃	0.885V	1.383V	1.744V	2.011V	2.220V	2.412V	2.589V	2.771V
45℃	1.018V	1.470V	1.776V	2.013V	2.212V	2.398V	2.594V	2.814V

Все каталоги и инструкции здесь: https://splitsystema48.ru/instrukcii-po-ekspluatacii-kondicionerov.html

7.4.3 Fan Motor(DC Motor) or Related Abnormality

Indoor Display	E14
Method of Malfunction Detection	The rotation speed detected by the Hall IC during fan motor operation is used to determine abnormal fan motor operation
Malfunction Decision Conditions	when the detected rotation feedback singal don't receiced in 2 minutes
Supposed Causes	■ Operation halt due to short circuit inside the fan motor winding. ■ Operation halt due to breaking of wire inside the fan motor . ■ Operation halt due to breaking of the fan motor lead wires ■ Dedection error due to faulty indoor unit PCB

How to check Fan Motor (DC)

1. Check connector connection.
2. Check motor power supply voltage output (pins 1-4).
3. Check motor control voltage (pins 4-5).
4. Check rotation command voltage output (pins 4-6).
5. Check rotation pulse input (pins 4-7).

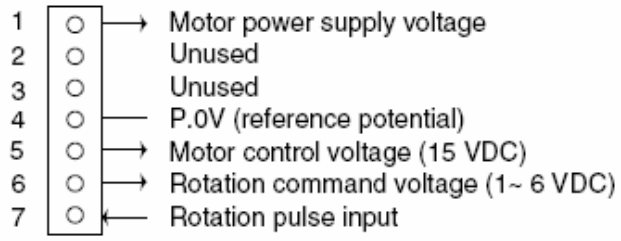

Notes:the a/c is electrifying,don't pull out or insert the terminals of the motor,else the motor would be damaged

Все каталоги и инструкции здесь: https://splitsystema48.ru/instrukcii-po-ekspluatacii-kondicionerov.html

Troubleshooting ＊Caution Be sure to turn off power switch before connect or disconnect connector, or else parts damage may be occurred.

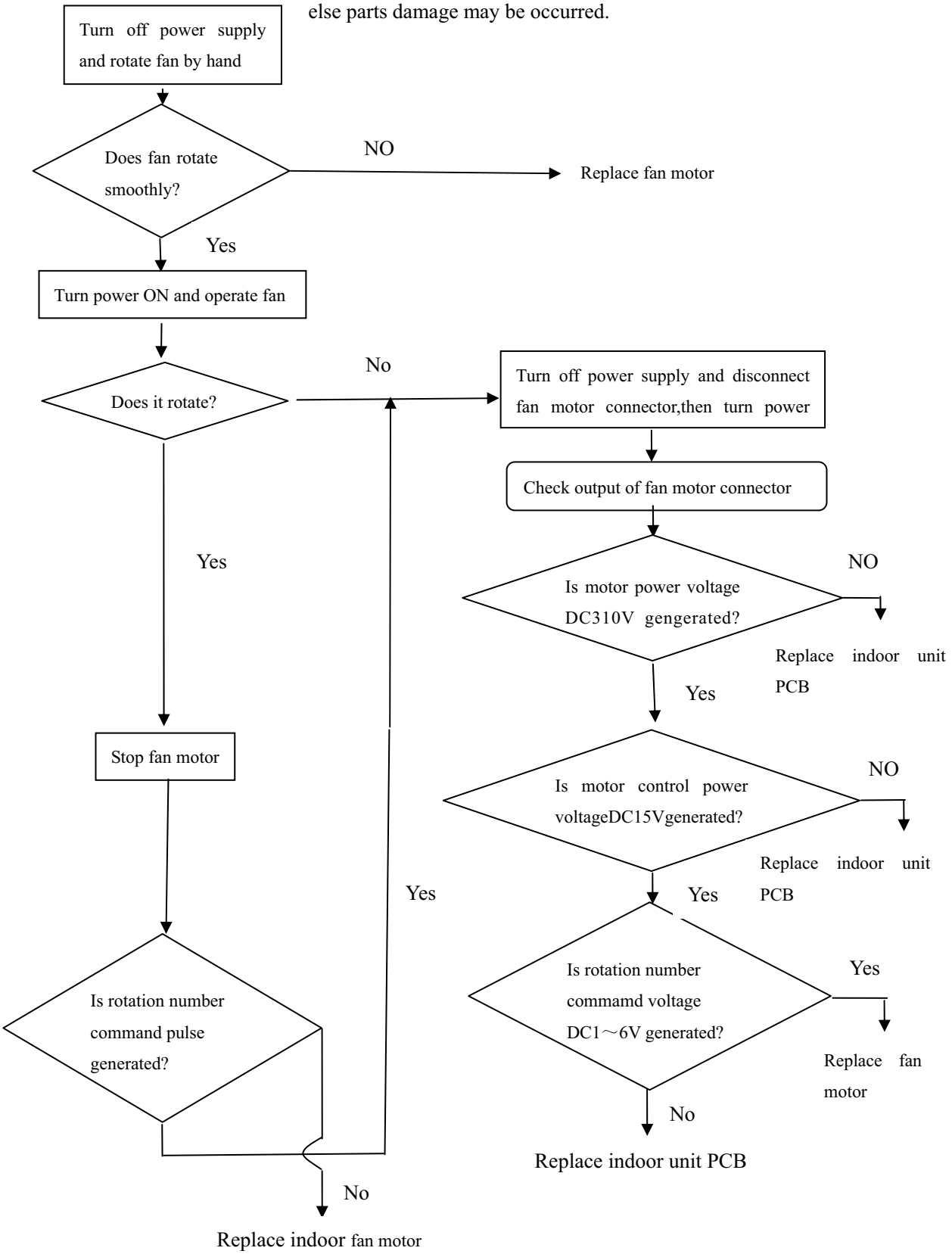

Все каталоги и инструкции здесь: https://splitsystema48.ru/instrukcii-po-ekspluatacii-kondicionerov.html

7.4.4 IPM protection

Indoor display	F1
Method of Malfunction Detection	IPM protection is detected by checking the compressor running condition and so on.
Malfunction Decision Conditions	■ The system leads to IPM protection due to over current ■ The compressor faulty leads to IPM protection ■ circuit component of IPM is broken and led to IPM protection
Supposed Causes	■ IPM protection dues to the compressor faulty ■ IPM protection dues to faulty PCB of IPM module ■ Compressor wiring disconnected

Troubleshooting ＊Caution Be sure to turn off power switch before connect or disconnect connector, or else parts damage may be occurred.

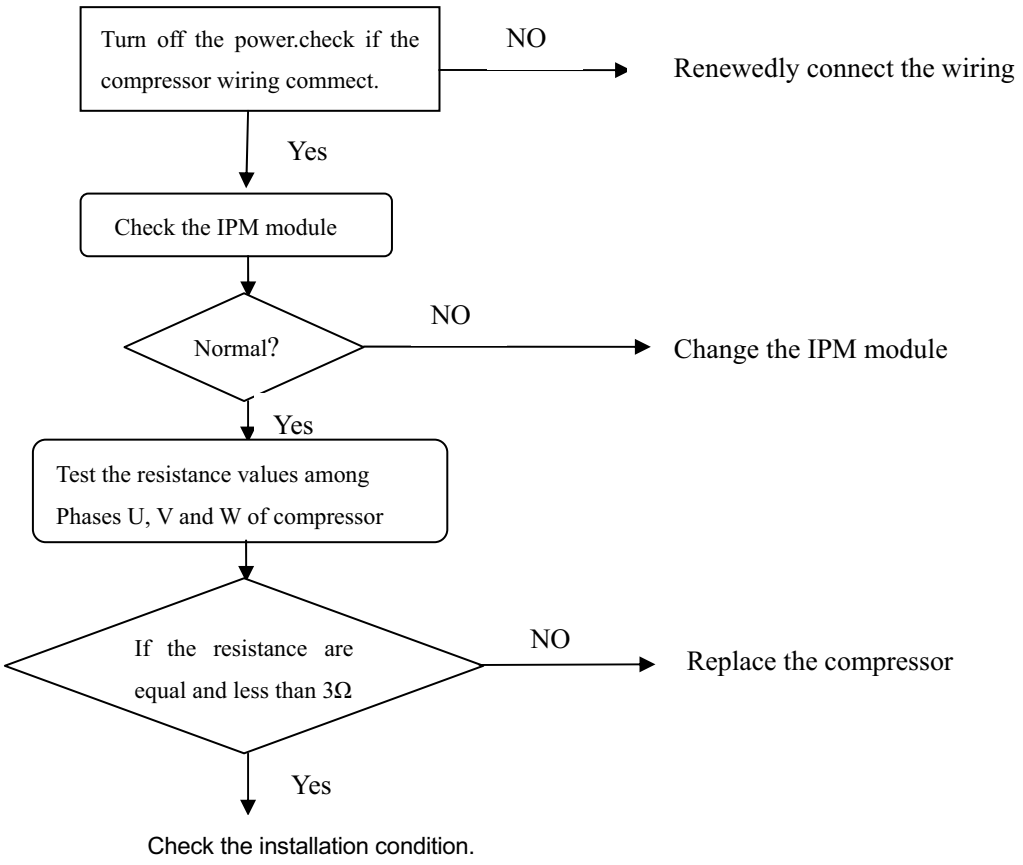

Check the IPM module method:

Disconnect the compressor harness connector from the outdoor unit PCB.
To disengage the connector, press the protrusion on the connector.
Then, to measure resistance between P (+) andN (-) and the U, V and W terminals of the compressor connector with a multi-tester. Evaluate the measurement results for a pass/fail judgment.

N(-)terminal of tester(P(+)for digital tester)	P(+)	UVW	P(-)	UVW
P(+)terminal of tester(N(-)for digital tester)	UVW	P(+)	UVW	P(-)
Normal resistance	Several kΩ to several MΩ (*)			
Unacceptable resistance	Short (0 Ω) or open			

Все каталоги и инструкции здесь: https://splitsystema48.ru/instrukcii-po-ekspluatacii-kondicionerov.html

7.4.5 The IPM and outdoor PCB don't communicate or Related Abnormality

Indoor display	F3
Method of Malfunction Detection	Communication is detected by checking the IPM module and the outdoor PCB
Malfunction Decision Conditions	■ The outdoor PCB broken leads to communication fault ■ The IPM module broken leads to communication fault
Supposed Causes	■ The outdoor PCB is broken ■ The IPM module is broken ■ Communication wiring disconnected
Troubleshooting	* Caution Be sure to turn off power switch before connect or disconnect connector, or else parts damage may be occurred.

Все каталоги и инструкции здесь: https://splitsystema48.ru/instrukcii-po-ekspluatacii-kondicionerov.html

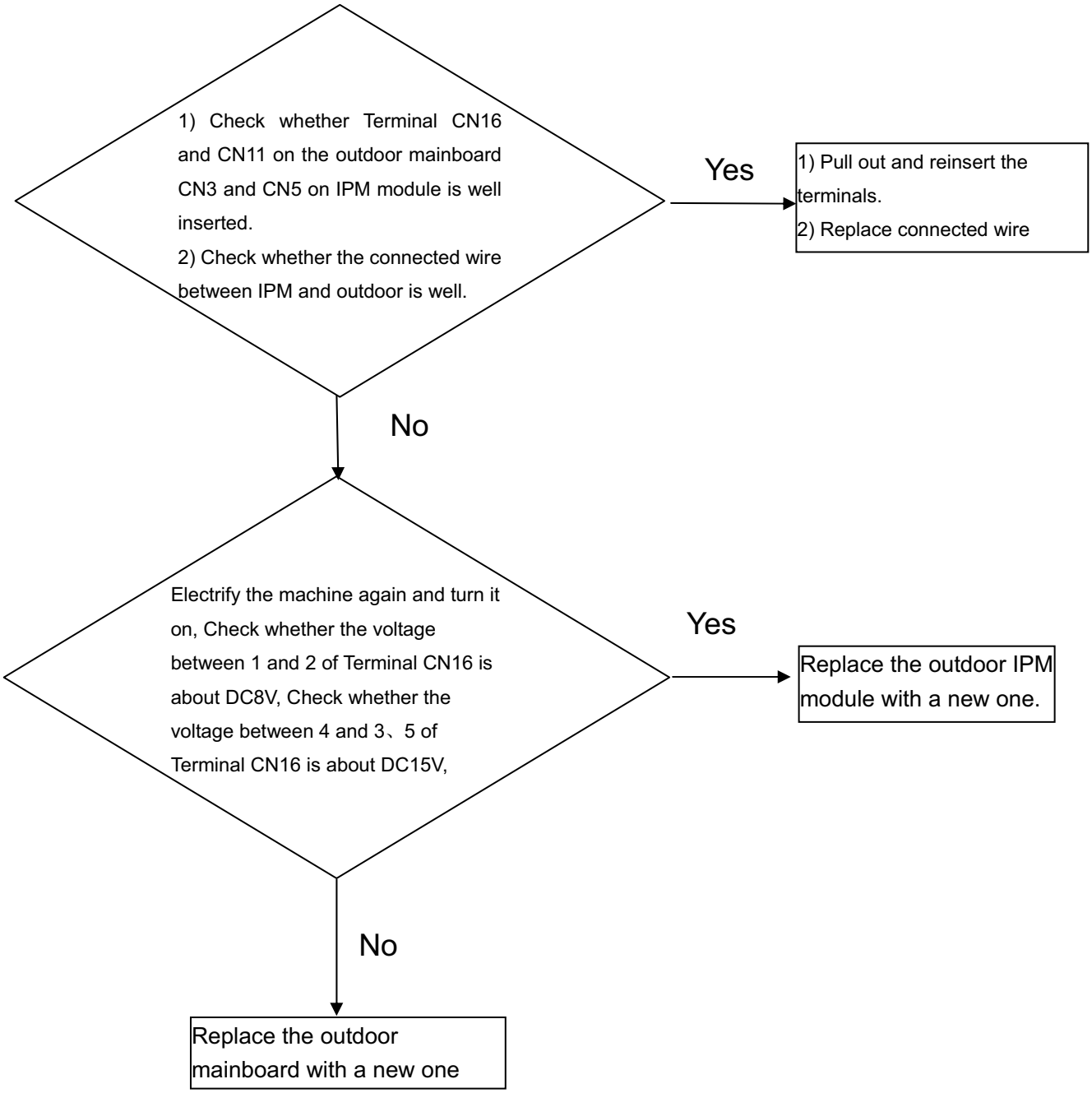

Все каталоги и инструкции здесь: https://splitsystema48.ru/instrukcii-po-ekspluatacii-kondicionerov.html

7.4.6 Thermistor or Related Abnormality(outdoor unit)

Indoor display F6 F7 F21 F25

Method of Malfunction Detection: This type of error is detected by checking the thermistor input voltage to the microcomputer. (A thermistor error is detected by checking the temperature)

Malfunction Decision Conditions: The thermistor input is above 4.9V or below 0.1V with the power on.

* Note: The values may vary slightly in some models

Supposed Causes:
- Faulty connector connection
- Faulty thermistor
- Faulty PCB

Troubleshooting * Caution Be sure to turn off power switch before connect or disconnect connector, or else parts damage may be occurred.

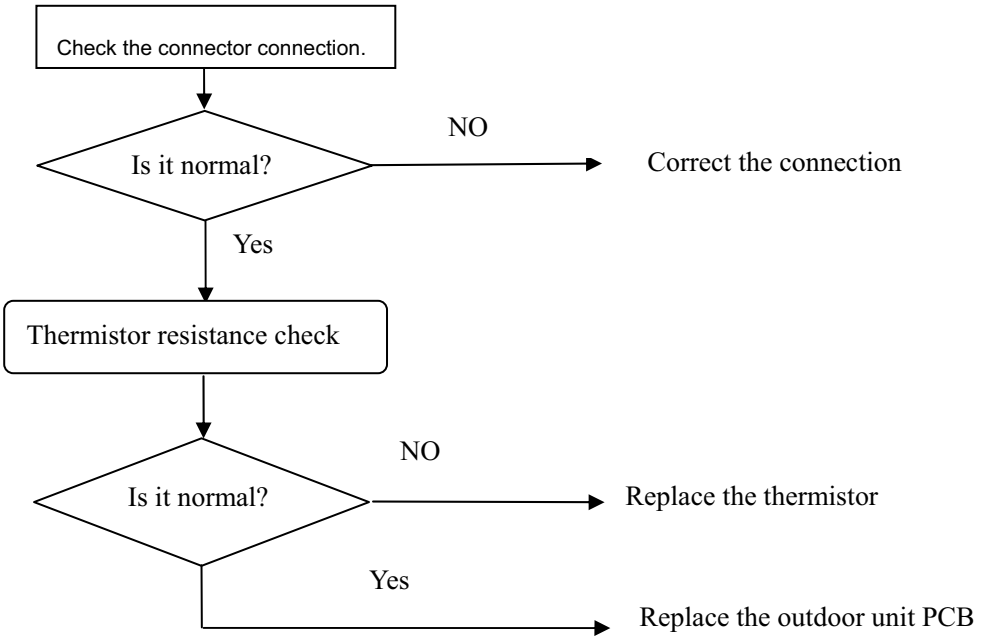

Thermistor resistance check method:

Remove the connectors of the thermistors on the PCB, and measure the resistance of thermistors using tester.The relationship between normal temperature and resistance is shown in the value of outdoor thermistor.

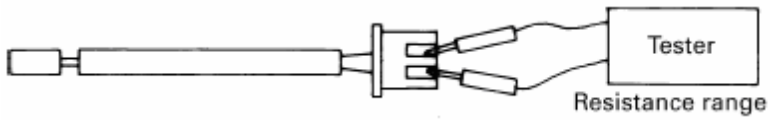

notes:

F6:Ambient temperature sensor failure

F7: Suction temperature sensor failure

F21: Frost-removing temperature sensor failure

F25: Exhaust temperature sensor failure

Все каталоги и инструкции здесь: https://splitsystema48.ru/instrukcii-po-ekspluatacii-kondicionerov.html

7.4.7 Overheat Protection For Exhaust Temperature

Indoor display	F4
Method of Malfunction Detection	the exhaust temperature control is checked with the temperature being detected by the exhaust pipe thermistor
Malfunction Decision Conditions	when the compressor discharge temperature is above 118℃
Supposed Causes	■ Electronic expansion valve defective ■ Faulty thermistor ■ Faulty PCB
Troubleshooting	＊Caution Be sure to turn off power switch before connect or disconnect connector, or else parts damage may be occurred.

Все каталоги и инструкции здесь: https://splitsystema48.ru/instrukcii-po-ekspluatacii-kondicionerov.html

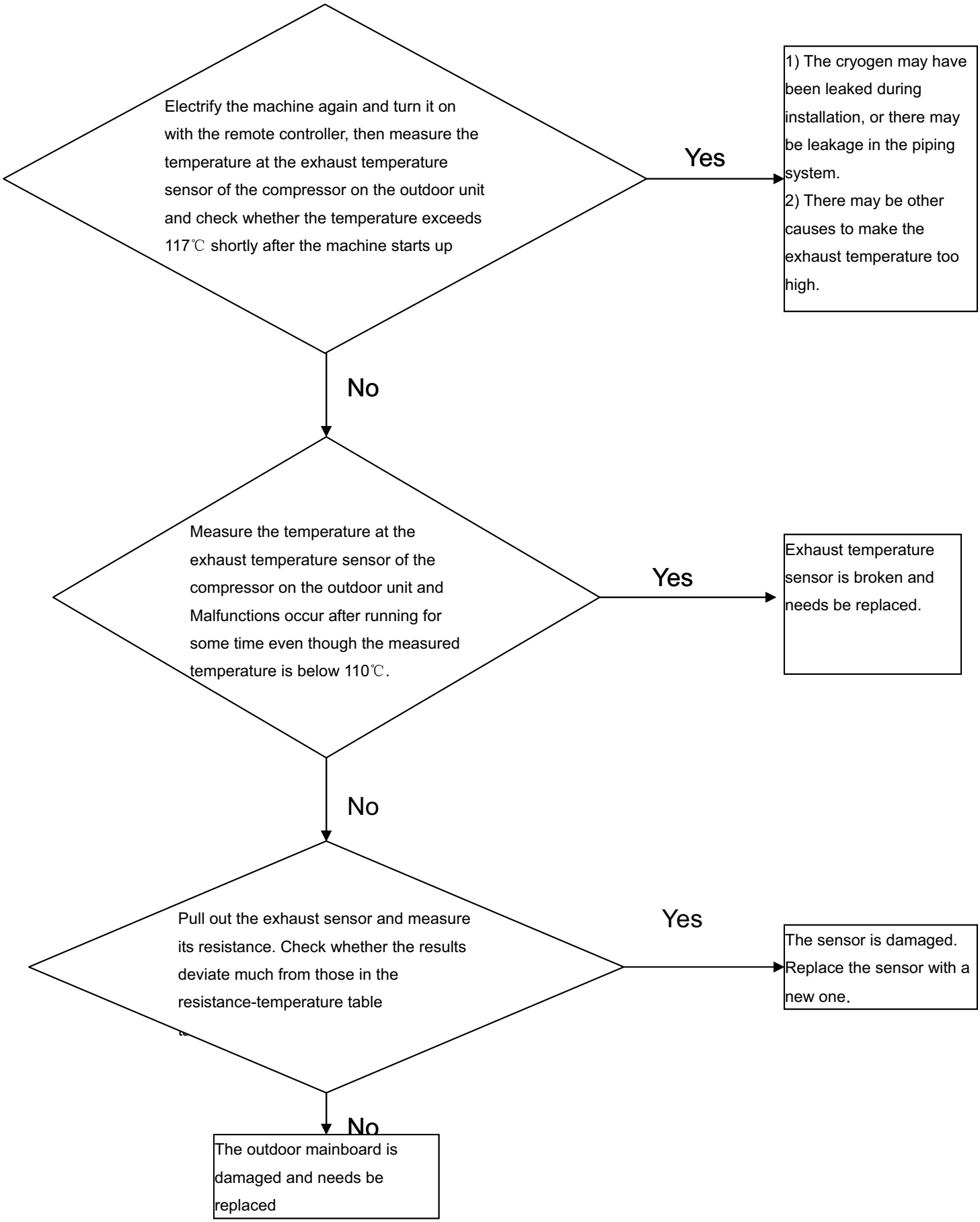

Все каталоги и инструкции здесь: https://splitsystema48.ru/instrukcii-po-ekspluatacii-kondicionerov.html

7.4.8 Communication error between the indoor and outdoor units

Indoor display	E7
Method of Malfunction Detection	The date received from the another unit in indoor unit-outdoor unit signal transmission is checked whether is normal
Malfunction Decision Conditions	When the date sent from the another unit cannot be received normally,or when the content of the data is abnormal
Supposed Causes	■ indoor unit- outdoor unit signal transmission error due to wiring error ■ Faulty PCB

Troubleshooting ＊Caution Be sure to turn off power switch before connect or disconnect connector, or else parts damage may be occurred.

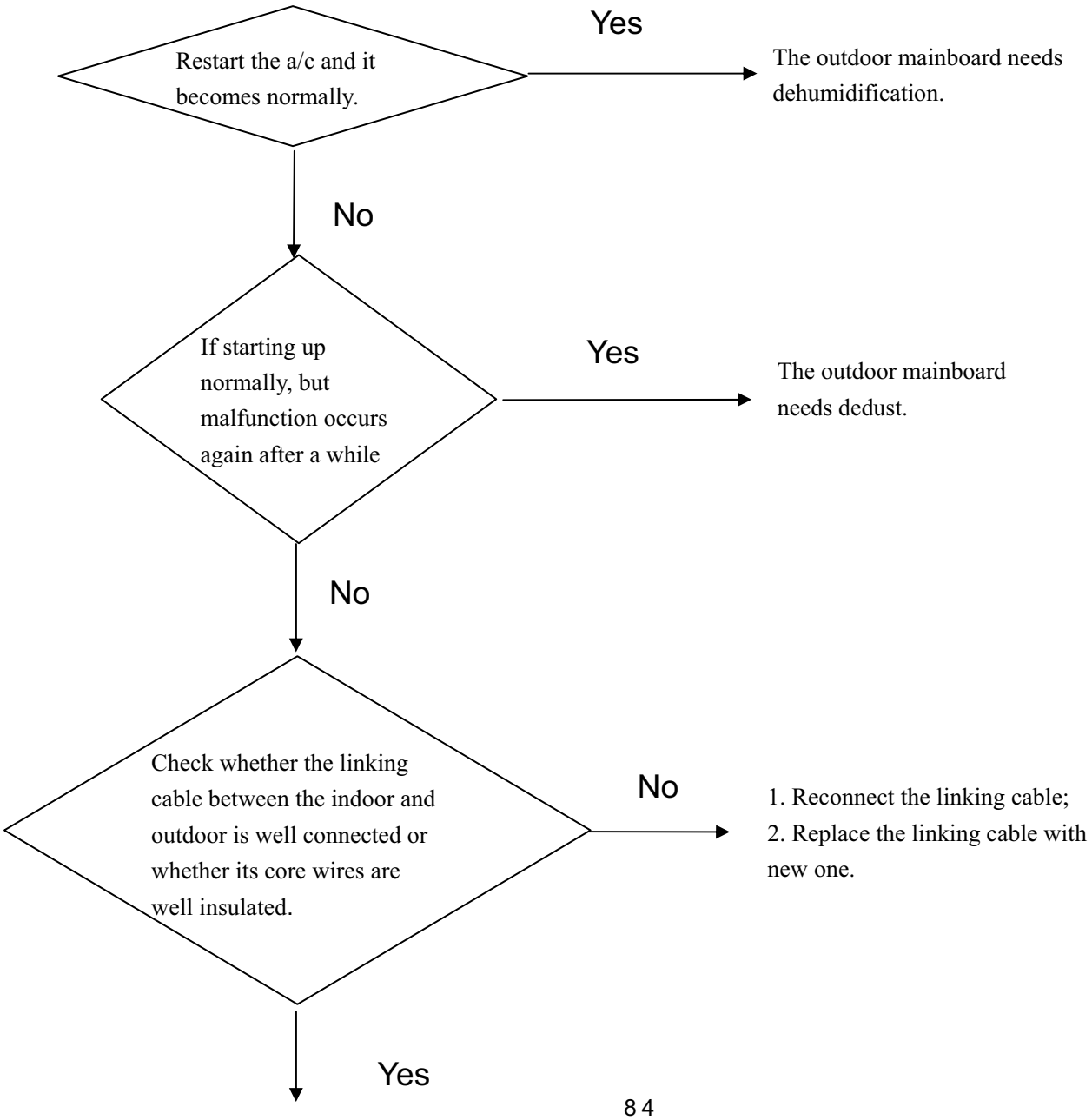

Все каталоги и инструкции здесь: https://splitsystema48.ru/instrukcii-po-ekspluatacii-kondicionerov.html

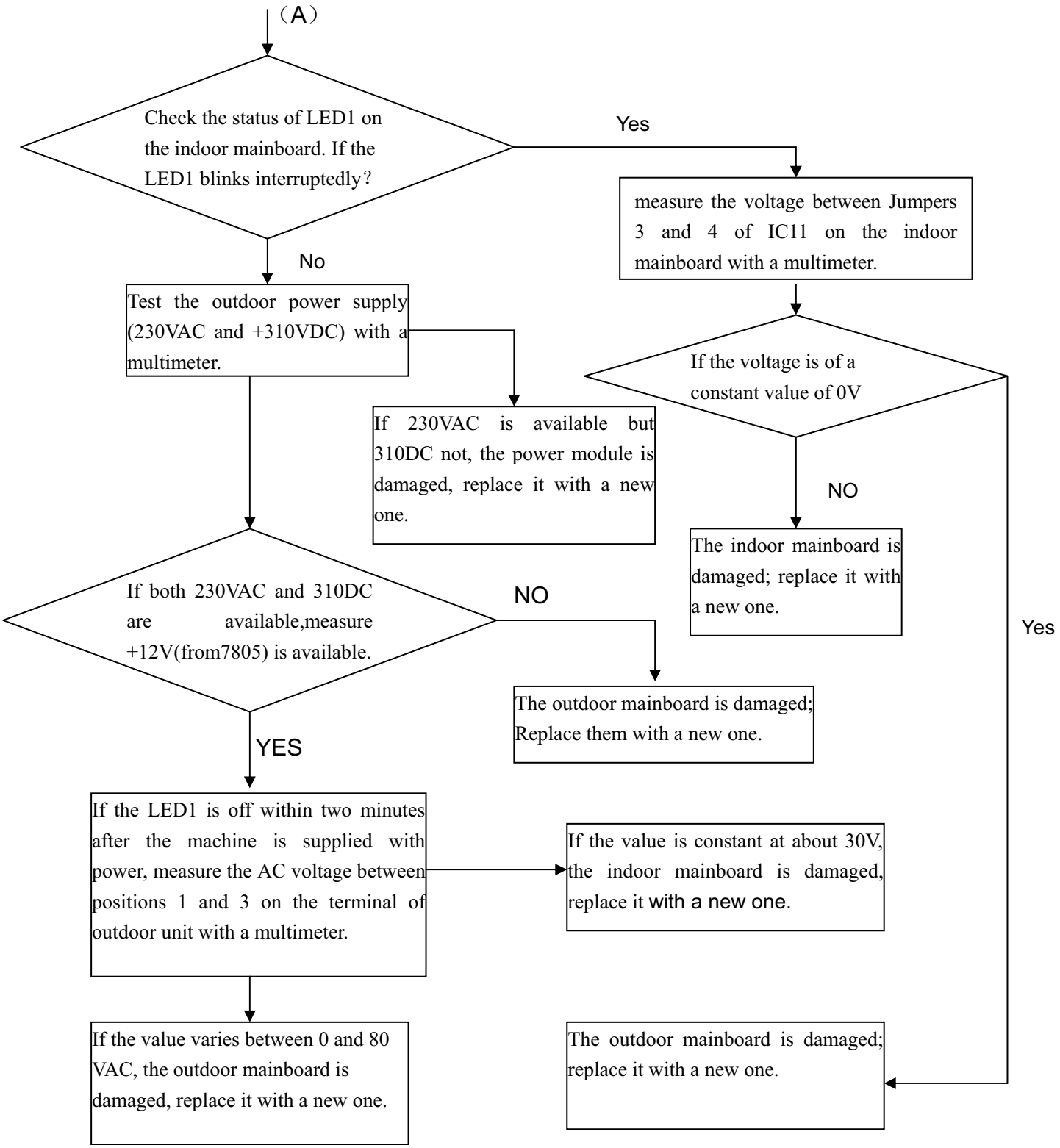

Все каталоги и инструкции здесь: https://splitsystema48.ru/instrukcii-po-ekspluatacii-kondicionerov.html

7.4.9 High work-intense protection

Indoor display	E9
Method of being sensed Malfunction Detection	High work-intense control is activated in the heating mode if the temperature by the heat exchanger thermistor exceeds the limit.
Malfunction Decision Conditions	Activated when the temperature being sensed by the heat exchanger thermistor rises above 65℃ in 30 minutes.
Supposed Causes	■ Faulty electronic expansion valve ■ Dirty heat exchanger ■ Faulty heat-exchange sensor ■ Insufficient gas

Troubleshooting ＊ Caution Be sure to turn off power switch before connect or disconnect connector, or else parts damage may be occurred.

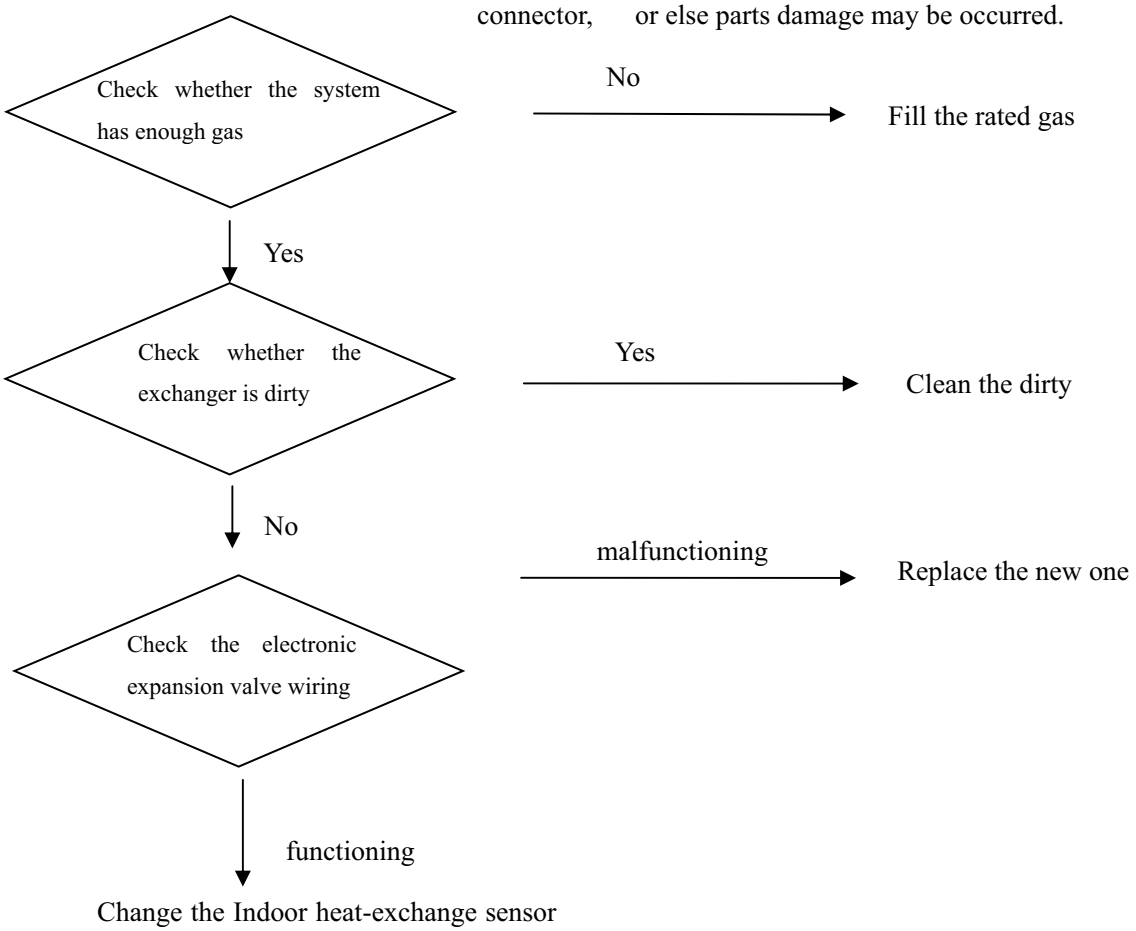

Все каталоги и инструкции здесь: https://splitsystema48.ru/instrukcii-po-ekspluatacii-kondicionerov.html

8 Installation

- Read this manual before installation
- Explain sufficiently the operating means to the user according to this manual.

Necessary Tools for Installation

1.Driver
2.Hacksaw
3.Hole core drill
4.Spanner(17,19 and 26mm)
5.Torque wrench(17mm,22mm,26mm)
6.Pipe cutter
7.Flaring tool
8.Knife
9.Nipper
10.Gas leakage detector or soap-and-water solution
11.Measuring tape
12.Reamer

Drawing for the installation of indoor and outdoor units

Accessory parts

No.	Accessory parts	Number of articles
①	Remote controller	1
②	R-03 dry battery	2
③	Mounting plate	1
④	Drain hose	1
⑤	Φ4X50 Steel nail, cement	6
⑥	Φ4X25 Screw / Plastic cap	4
⑦	Drain-elbow	1
⑧	Cover	1
⑨	Cushion	4

Optional parts for piping

Mark	Parts name
Ⓐ	Non-adhesive tape
Ⓑ	Adhesive tape
Ⓒ	Saddle(L.S) with screws
Ⓓ	Connecting electric cable for indoor and outdoor
Ⓔ	Drain hose
Ⓕ	Heating insulating material
Ⓖ	Piping hole cover

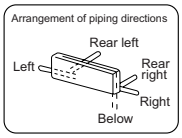

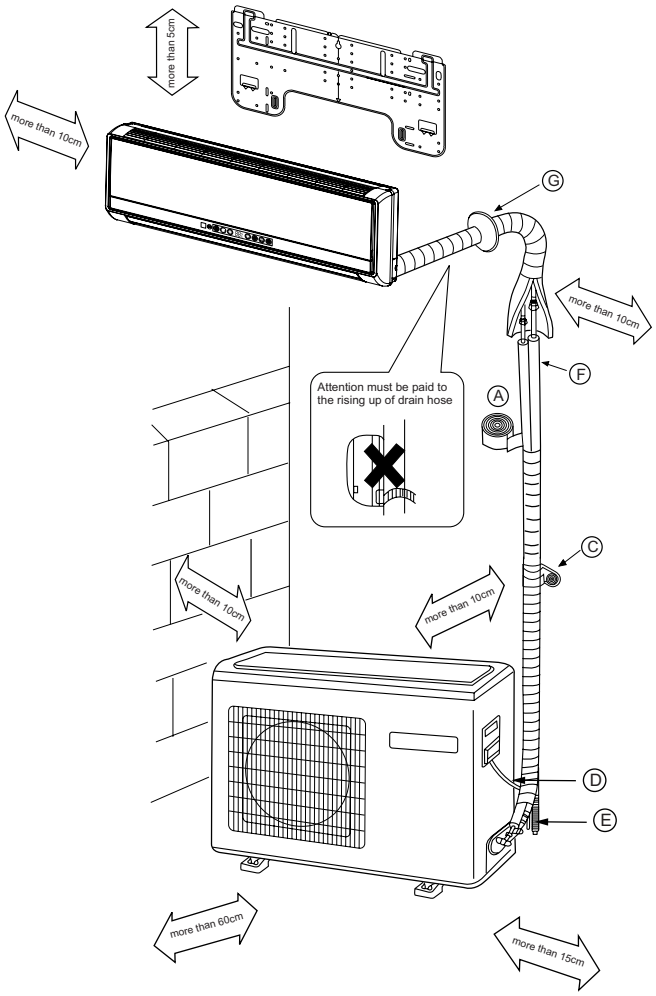

※ The marks from Ⓐ to Ⓖ in the figure are the parts numbers.

※ The distance between the indoor unit and the floor should be more than 2m.

Все каталоги и инструкции здесь: https://splitsystema48.ru/instrukcii-po-ekspluatacii-kondicionerov.html

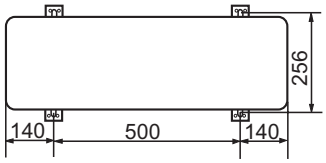

Floor fixing dimensions of the outdoor unit (Unit:mm)

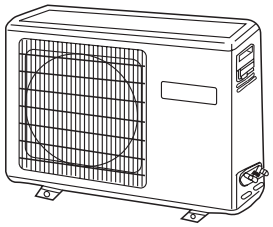

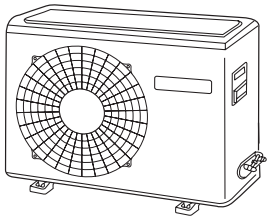

Fixing of outdoor unit

- Fix the unit to concrete or block with bolts(ϕ10mm) and nuts firmly and horizontally.
- When fitting the unit to wall surface, roof or rooftop, fix a supporter surely with nails or wires in consideration of earthquake and strong wind.
- If vibration may affect the house, fix the unit by attaching a vibration-proof mat.

Selection of Installation Place

Indoor Unit

- Place, robust not causing vibration, where the body can be supported sufficiently.
- Place, not affected by heat or steam generated in the vicinity, where inlet and outlet of the unit are not disturbed.
- Place, possible to drain easily, where piping can be connected with the outdoor unit.
- Place, where cold air can be spread in a room entirely.
- Place, nearby a power receptacle, with enough space around. (Refer to drawings).
- Place where the distance of more than lm from televisions, radios, wireless apparatuses and fluorescent lamps can be left.
- In the case of fixing the remote controller on a wall, place where the indoor unit can receive signals when the fluorescent lamps in the room are lightened.

Outdoor Unit

- Place, which is less affected by rain or direct sunlight and is sufficiently ventilated.
- Place, possible to bear the unit, where vibration and noise are not increased.
- Place, where discharged wind and noise do not cause a nuisance to the neighbors.
- Place, where a distance marked is available as illustrated in the above figure.

Power Source

- Before inserting power plug into receptacle, check the voltage without fail. The power source is the same as the corresponding name plate.
- Install an exclusive branch circuit of the power.
- A receptacle shall be set up in a distance where the power cable can be reached. Do not extend the cable by cutting it.

Selection of pipe

- To this unit, both liquid and gas pipes shall be insulated as they become low temperature in operation.
- Use optional parts for piping set or pipes covered with equivalent insulation material.
- The thickness of the pipe must be 0.8 mm at least.

	For 09	For 12
Liquid pipe(ϕ)	6.35mm(1/4")	6.35mm(1/4")
Gas pipe(ϕ)	9.52mm(3/8")	12.7mm(1/2")

Все каталоги и инструкции здесь: https://splitsystema48.ru/instrukcii-po-ekspluatacii-kondicionerov.html

Indoor unit

1.Fitting of the Mounting Plate and Positioning of the wall Hole

When the mounting plate is first fixed

1. Carry out, based on the neighboring pillars or lintels, a proper leveling for the plate to be fixed against the wall, then temporarily fasten the plate with one steel nail.
2. Make sure once more the proper level of the plate, by hanging a thread with a weight from the central top of the plate, then fasten securely the plate with the attachment steel nail.
3. Find the wall hole location A using a measuring tape

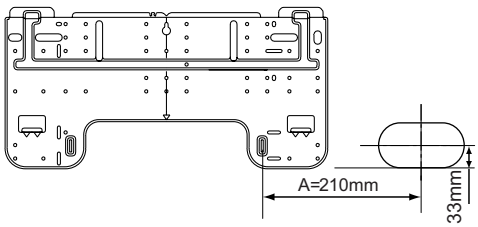

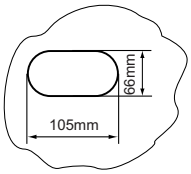

For the units with fresh air function

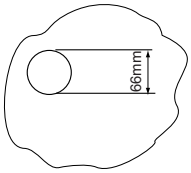

When the mounting plate is fixed side bar and lintel

- Fix to side bar and lintel a mounting bar, Which is separately sold, and then fasten the plate to the fixed mounting bar.
- Refer to the previous article, " When the mounting plate is first fixed ", for the position of wall hole.

2.Making a Hole on the Wall and Fitting the Piping Hole Cover

- Make a hole of 66 mm in diameter, slightly descending to outside the wall.
- Install piping hole cover and seal it off with putty after installation

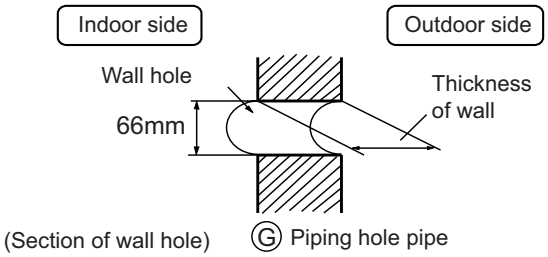

3.Installation of the Indoor Unit

Drawing of pipe

[Rear piping]

- Draw pipes and the drain hose, then fasten them with the adhesive tape

[Left • Left-rear piping]

- In case of left side piping, cut away, with a nipper, the lid for left piping.
- In case of left-rear piping, bend the pipes according to the piping direction to the mark of hole for left-rear piping which is marked on heat insulation materials.

Все каталоги и инструкции здесь: https://splitsystema48.ru/instrukcii-po-ekspluatacii-kondicionerov.html

Indoor unit

1. Insert the drain hose into the dent of heat insulation materials of indoor unit.
2. Insert the indoor/outdoor electric cable from backside of indoor unit, and pull it out on the front side, then connect them.
3. Coat the flaring seal face with refrigerant oil and connect pipes.
   Cover the connection part with heat insulation materials closely, and make sure fixing with adhesive tape

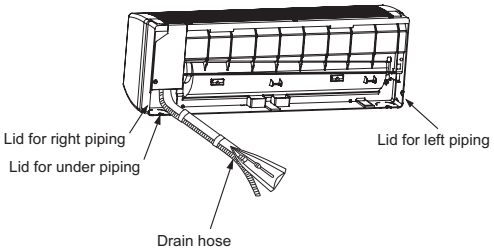

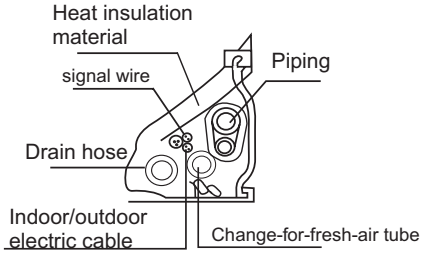

- Indoor/outdoor electric cable and drain hose must be bound with refrigerant piping by protecting tape.

[Other direction piping]

- Cut away, with a nipper, the lid for piping according to the piping direction and then bend the pipe according to the position of wall hole. When bending, be careful not to crash pipes.
- Connect beforehand the indoor/outdoor electric cable, and then pull out the connected to the heat insulation of connecting part specially.

Fixing the indoor unit body

- Hang surely the unit body onto the upper notches of the mounting plate. Move the body from side to side to verify its secure fixing.
- In order to fix the body onto the mounting plate,hold up the body aslant from the underside and then put it down perpendicularly.

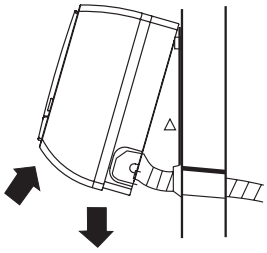

4.Connecting the indoor/outdoor Electric Cable

Removing the wiring cover

- Remove terminal cover at right bottom corner of indoor unit, then take off wiring cover by removing its screws.

When connecting the cable after installing the indoor unit

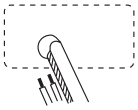

1. Insert from outside the room cable into left side of the wall hole, in which the pipe has already existed.
2. Pull out the cable on the front side, and connect the cable making a loop.

When connecting the cable before installing the indoor unit

- Insert the cable from the back side of the unit, then pull it out on the front side.
- Loosen the screws and insert the cable ends fully into terminal block, then tighten the screws.
- Pull the cable slightly to make sure the cables have been properly inserted and tightened.
- After the cable connection, never fail to fasten the connected cable with the wiring cover.
  Note: When connecting the cable, confirm the terminal number of indoor and outdoor units carefully.
  If wiring is not correct, proper operation can not be carried out and will cause defect.

Все каталоги и инструкции здесь:

Indoor unit

1. If the supply cord is damaged, it must be replaced by the manufacturer or its service agent or a similar qualified person. The type of connecting wire is H05RN-F or H07RN-F.
2. If the fuse on PC board is broken please change it with the type of T. 3.15A/250V.
3. The wiring method should be in line with the local wiring standard.
4. After installation, the power plug should be easily reached.
5. A breaker should be incorporated into fixed wiring. The breaker should be all-pole switch and the distance between its two contacts should be not less than 3mm.

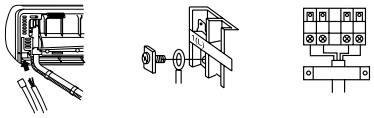

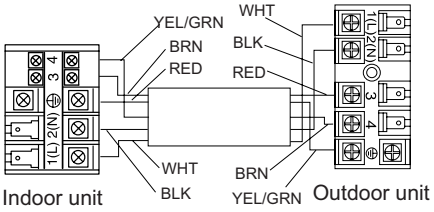

HSU-09H03/R(QXF)
HSU-12H03/R(QXF)

Connecting wiring: ⩾5G1.0mm²+1x0.75mm²
Power cable: ⩾3G1.5mm²

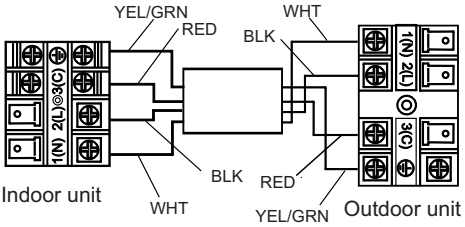

HSU-09H03/R(DB)
HSU-12H03/R(DB)

Connecting wiring: ⩾3G1.5mm²+2x0.75mm²
Power cable: ⩾3G1.5mm²

For the units with fresh air function

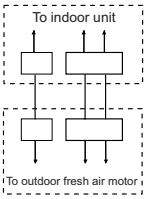

The connecting method of fresh air box signal wire

5.Installation instruction on the indoor part of the fresh air device

Two ways for the installation of indoor part, as illustrated:
Way One : When the pipes go from the back of the indoor unit, you can connect the fresh air tube with the outlet joint on the two sides of the frame,and then fix it at the pipe exit of the frame
Way Two : When installing the side outlet pipe,connect the fresh tube and the outlet joint ,and then fix it on the left side or right side of the frame.Outlet pipe is connected with the pipe hole cover by the pipe lid.

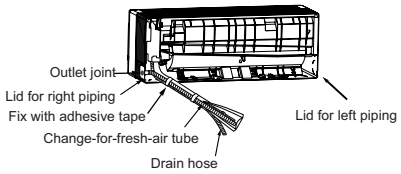

Installation way One

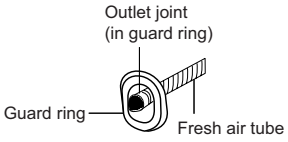

Installation way Two

- See the Installation from the fresh air sets for the installation of outdoor unit.

6.Easily-demount cleaning of indoor unit

1.Top inlet can be taken down

Open the inlet grille, press the claw of the clip on the unit,then take down the top inlet.(according to figure 1)

2.Vertical flap can be taken down

Overturn the vertical flap, press the claw of the clip ,then take down vertical flap.(according to figure 2)

3.Horizontal louvers can be taken down

After taking down vertical flap.Horizontal louvers are appeared,draw the middle louver,and take down the horizontal louvers . (according to figure 3)

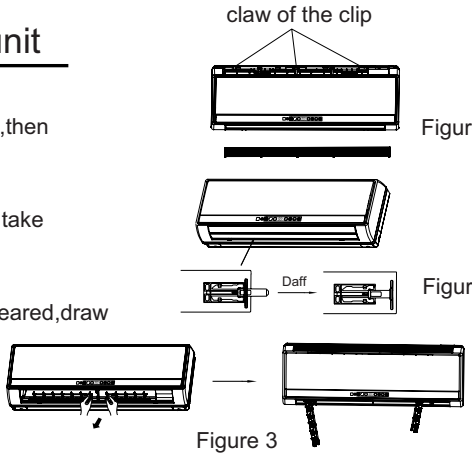

Все каталоги и инструкции здесь: https://splitsystema48.ru/instrukcii-po-ekspluatacii-kondicionerov.html

Outdoor unit

1.Installation of Outdoor Unit

Install according to Drawing for the installation of indoor and outdoor units

2.Connection of pipes

- To bend a pipe, give the roundness as large as possible not to crush the pipe
- Connecting the pipe of gas side first makes working easier.
- The max vertical distance between the indoor unit and the outdoor unit is 5 m.

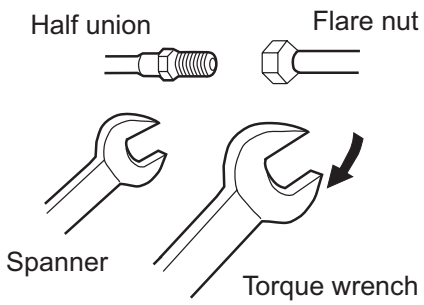

Forced fastening without careful centering may damage the threads and cause a leakage of gas.

Pipe Diameter (Φ)	Fastening torque
Liquid side 6.35mm(1/4")	18N.m
Gas side 9.52mm(3/8")	40N.m
Gas side 12.7mm(1/2")	55N.m

Be careful that matters, such as wastes of sands, etc. shall not enter the pipe.

3.Connection

- Use the same method on indoor unit. Loosen the screws on terminal block and insert the plugs fully into terminal block, then tighten the screws.
- Insert the cable according to terminal number in the same manner as the indoor unit.
- If wiring is not correct, proper operation can not be carried out and controller may be damaged.
- Fix the cable with a clamp.

4.Attaching Drain-Elbow

- If the drain-elbow is used, please attach it as figure. (Note: Only for heat pump unit.)

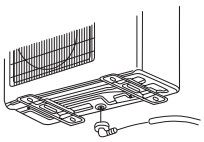

Все каталоги и инструкции здесь: https://splitsystema48.ru/instrukcii-po-ekspluatacii-kondicionerov.html

Outdoor unit

6.Purging Method:To use vacuum pump

Push the air out of the indoor unit and piping as followes:

(1) Remove the valve cap on 2-way valve in outdoor unit.

(2) Loosen by 1/2 turn the flare nut of gas pipe, which is conneted to 3-way valve.

(3) Loosen 2-way valve by 90° using hexagon wrench, and after approx. 10 sec tighten it up. Gas comes out through flare nut on wide pipe. If no gas is discharged, tighten flare nut with specified torque.

(4) Open 2-way and 3-way valves using specified torque.

(5) Tighten the caps on the valves with specified torque.

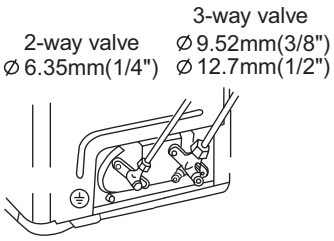

	Tighten torque N.m
Valve rod	7-9
Valve cap	20-25

- When connecting pipe exceeds 5 meters, 16g refrigerant shall be added per exceeding meter. Charge according to the following list.

Piping length	5m	7m	10m
Additional amount	No need	32g	80g

- Note: When extending piping, air inside piping shall be removed by using external refrigerant gas, charge according to the following list.

Brand new outdoor unit is charged 50g more refrigerant than regulated weight、Only for first installation, this extra 50g can be used to purge air in pipes.

★ 1 During this procedure, 50g refrigerant will be discharged in piping. (This must be strictly controlled within 90° and 10 sec.)

Все каталоги и инструкции здесь: https://splitsystema48.ru/instrukcii-po-ekspluatacii-kondicionerov.html

1.Power Source Installation

- The power source must be exclusively used for air conditioner. (Over I0A)
- In the case of installing an air conditioner in a moist place, please install an earth leakage breaker.
- For installation in other places, use a circuit breaker as far as possible.

2.Cutting and Flaring Work of Piping

- Pipe cutting is carried out with a pipe cutter and burs must be removed.
- After inserting the flare nut, flaring work is carried out.

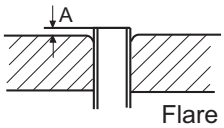

Flare tooling die

	Pipe diameter(ϕ)	Size A(mm)
Liquid side	6.35mm(1/4")	0.8~1.5
Gas side	9.52mm(3/8")	1.0~1.8
Gas side	12.7mm(1/2")	1.2~2.0

Correct	Incorrect
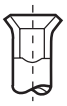	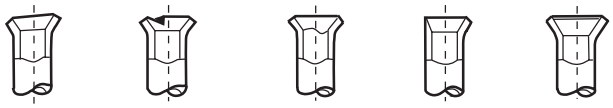 Lean Damage of flare Crack Partial Too outside

3.On Drainage

Please install the drain hose so as to be downward slope without fail.
Please don't do the drainage as shown below.

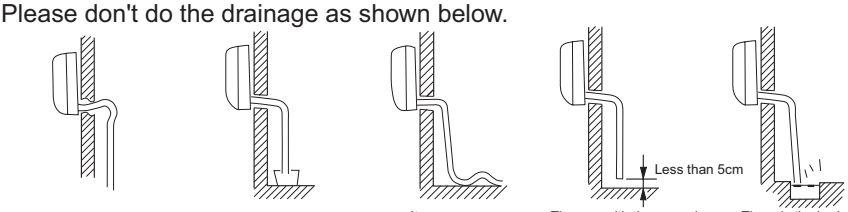

It becomes high midway. The end is immersed in water. It waves. The gap with the ground is too small There is the bad smell from a ditch

- Please pour water in the drain pan of the indoor unit, and confirm that drainage is carried out surely to outdoor.
- In case that the attached drain hose is in a room, please apply heat insulation to it without fail.

Check for Installation and Test Run

- Please kindly explain to our customers how to operate through the instruction manual.

Check Items for Test Run

☐ Put check mark ✓ in boxes

- ☐ Gas leak from pipe connecting?
- ☐ Heat insulation of pipe connecting?
- ☐ Are the connecting wirings of indoor and outdoor firmly inserted to the terminal block?
- ☐ Is the connecting wiring of indoor and outdoor firmly fixed?
- ☐ Is drainage securely carried out?
- ☐ Is the earth line securely connected?
- ☐ Is the indoor unit securely fixed?
- ☐ Is power source voltage abided by the code?
- ☐ Is there any noise?
- ☐ Is the lamp normally lighting?
- ☐ Are cooling and heating (when in heat pump) performed normally?
- ☐ Is the operation of room temperature regulator normal?

Все каталоги и инструкции здесь: https://splitsystema48.ru/instrukcii-po-ekspluatacii-kondicionerov.html

9. Removal Procedure

Indoor unit

9.1 Removal of Air Filter

Procedure

Warning Be sure to wait 10 minutes or more after turning off all power supplies before disassembling work.

Step	Procedure		Points
1. Features		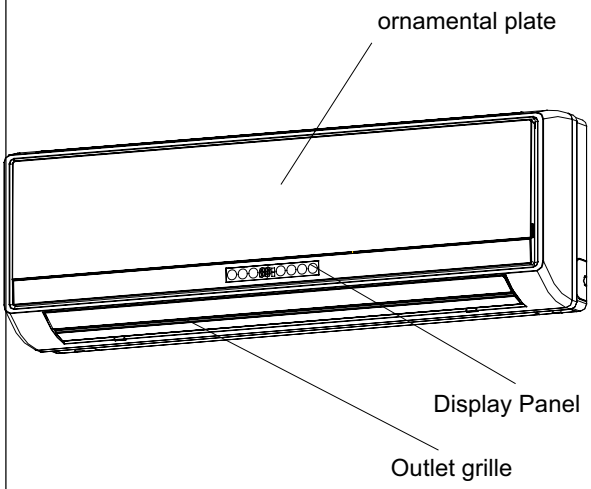	
2. Remove the air filters.			
1	Hold the front panel by the tabs on the both sides and lift it until it stops with a click.	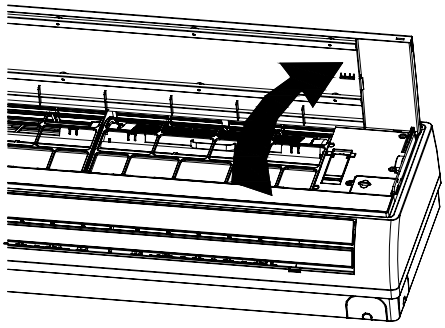	
2	Keep the front panel open with the support plate.	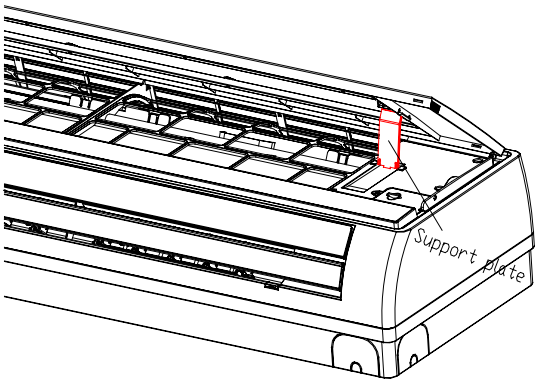	

Все каталоги и инструкции здесь: https://splitsystema48.ru/instrukcii-po-ekspluatacii-kondicionerov.html

Step	Procedure		Points
3	Lift an air filter upwards slightly and then pull it out downwards.	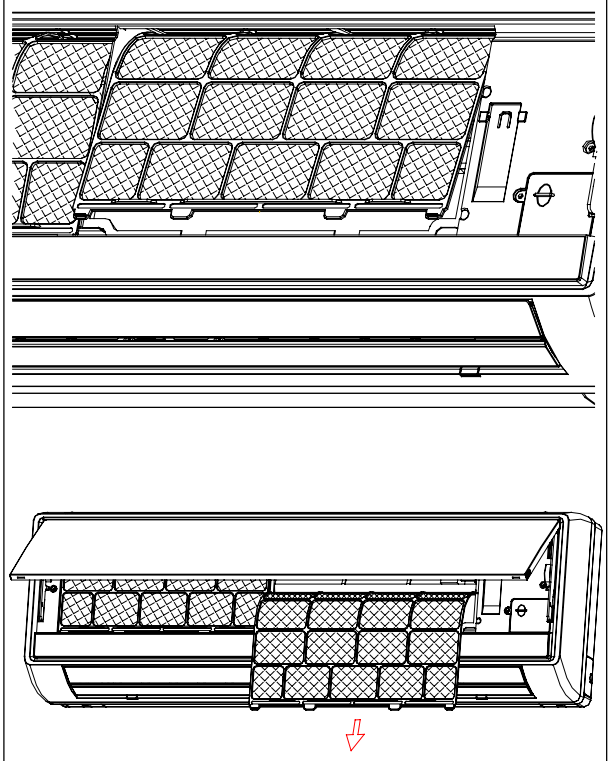	■ Insert the air filters along grooves when installing. ■ When installing, insert 2 hooks of the air filter completely.
3. Remove the air-purifying filter.			■ The right and left air-purifying filters are interchangeable.
1	Titanium Apatite Photo-catalytic Air-purifying Filter is fixed on the rear of the air filter.	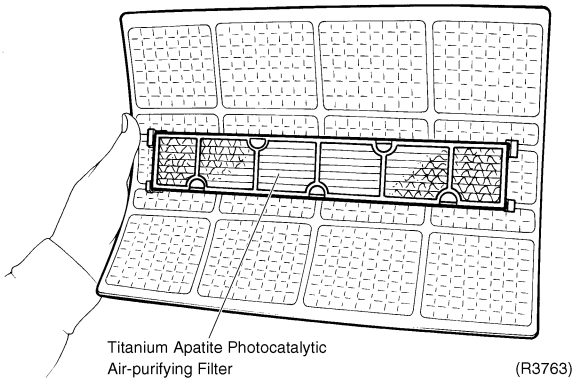	
2	Bend the air filter to release the protrusions and remove the Titanium Apatite Photocatalytic Air-Purifying filter.	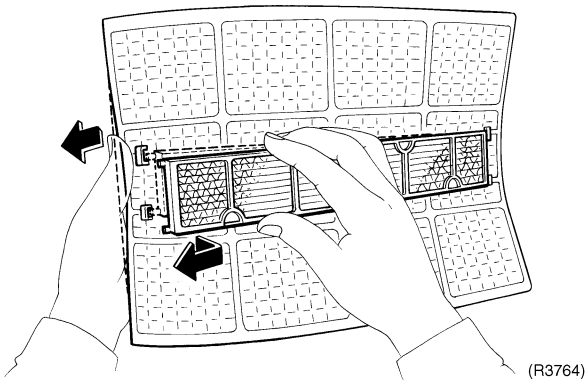	

Все каталоги и инструкции здесь: https://splitsystema48.ru/instrukcii-po-ekspluatacii-kondicionerov.html

9.2 Removal of Front Grille

Procedure

⚠ Warning Be sure to wait 10 minutes or more after turning off all power supplies before disassembling work.

Step	Procedure		Points
1. Remove the front panel.			
1	Open the front panel to the horizontal position. Release the both sides pivots and remove the front panel.	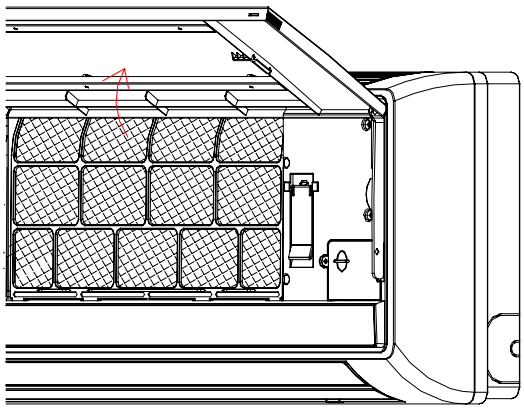 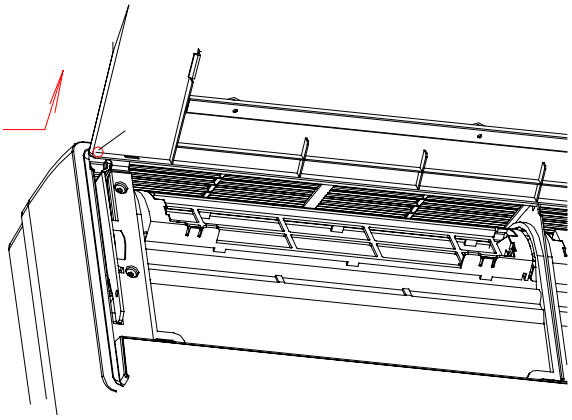	■ Start the removal procedure of front grille when the panels are closed. ■ Slide the front panel side to side to release each axis. ■ When assembling, align the right and left axes with grooves in turn and insert them to the end.

Все каталоги и инструкции здесь: https://splitsystema48.ru/instrukcii-po-ekspluatacii-kondicionerov.html

Step	Procedure		Points
2	Release the marked four hooks.	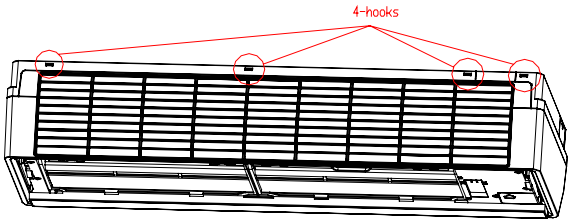 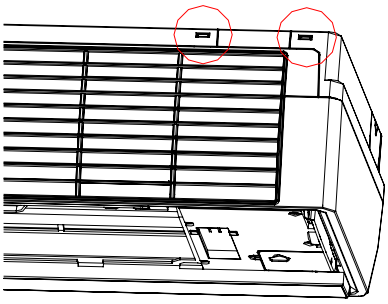	
3	Loosen the marked four screws	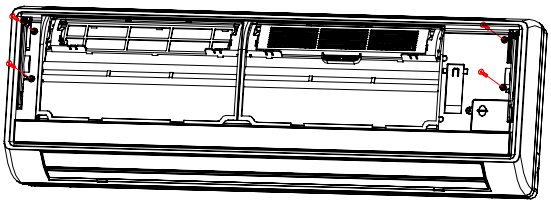	
4	Pull the front grille out horizontally and remove it.	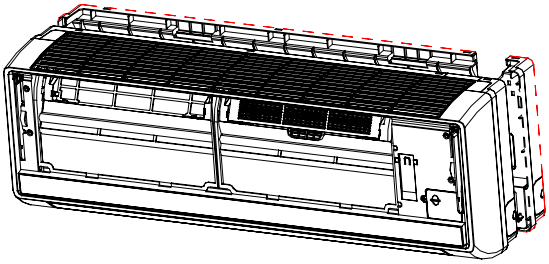	■ When assembling, install the front grille horizontally so as not to stuff the flap inside. ■ When assembling, make sure the three hooks are caught properly.

Все каталоги и инструкции здесь: https://splitsystema48.ru/instrukcii-po-ekspluatacii-kondicionerov.html

9.3 Removal of Assembly of Front Panel Mechanism

Procedure

Warning Be sure to wait 10 minutes or more after turning off all power supplies before disassembling work.

Step	Procedure	Points
■ Remove the front grille.		
1. Remove the assembly of front panel mechanism.		
1	The back of the front grilles	
2	Loosen the 2 screws of the assembly (left).	
3	Remove the assembly.	■ When assembling, insert the lower rack plate first.
4	Lift the shaft and pull it out to the rightward.	■ Be careful so as not to lose the drive gear.

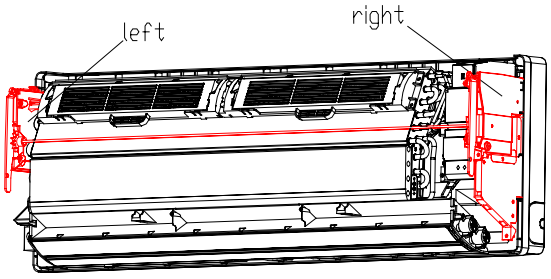

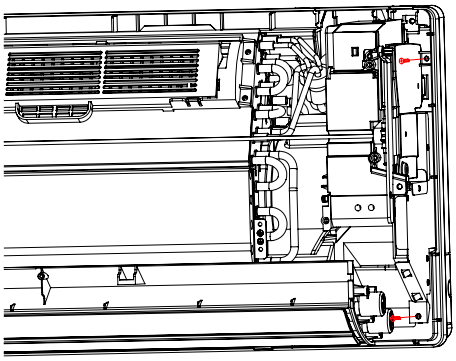

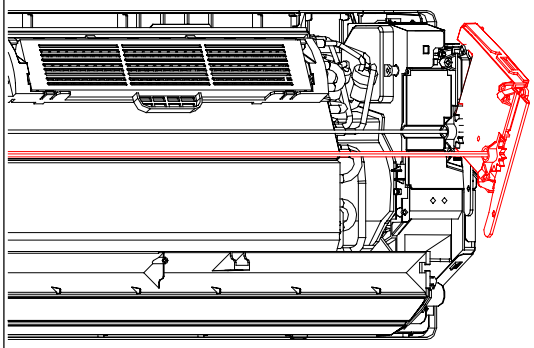

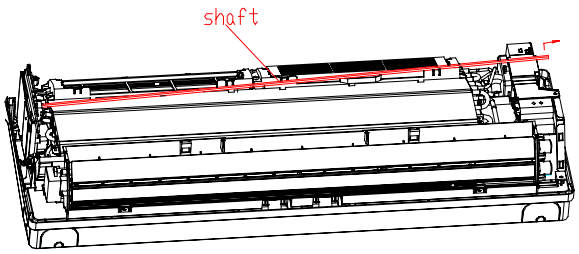

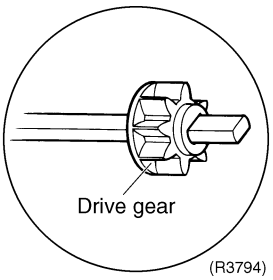

Все каталоги и инструкции здесь: https://splitsystema48.ru/instrukcii-po-ekspluatacii-kondicionerov.html

Step	Procedure		Points
5	Loosen the 2 screws of the assembly (right).	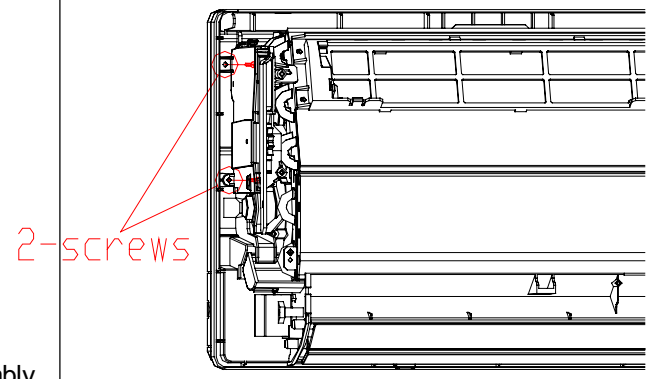	
6	Remove the assembly.	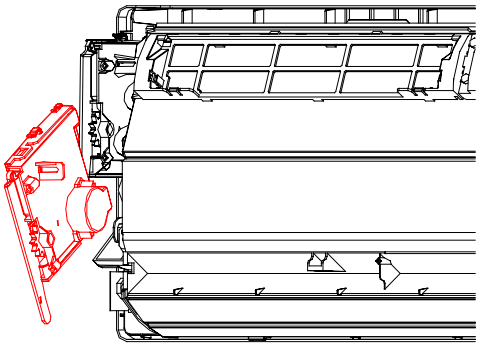 outside 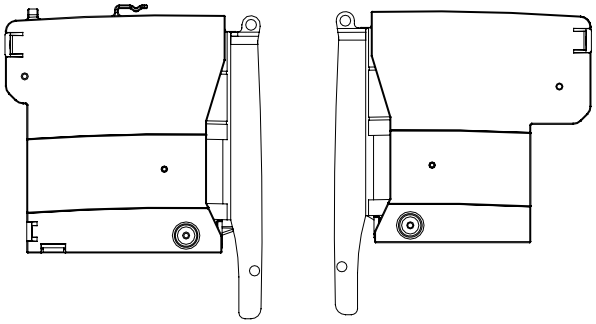 inside 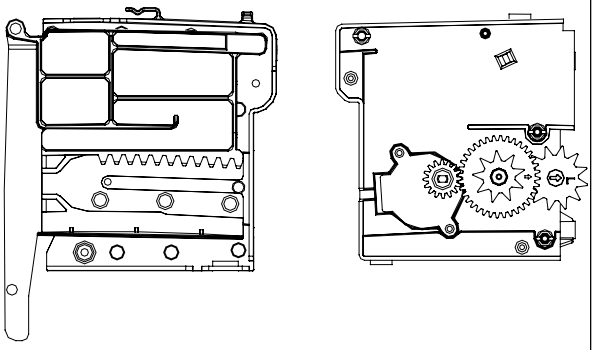	■ When assembling, insert the lower rack plate first.

Все каталоги и инструкции здесь: https://splitsystema48.ru/instrukcii-po-ekspluatacii-kondicionerov.html

Step	Procedure		Points
2.	Remove the lower rack plate.		
1	Loosen the 2 screws of the left assembly cover.	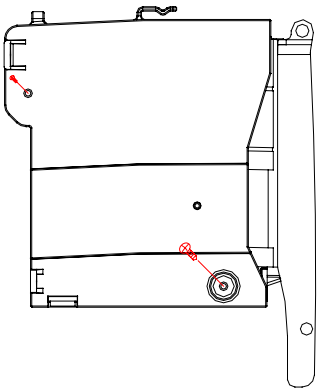	
2	Hold the assembly horizontally and release the upper hook.	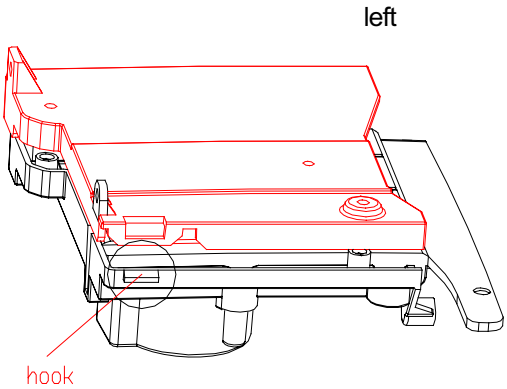	■ When you demand small parts like cogs and rollers, order a set of assembly.
3	Keep the assembly horizontally and undo the hooks on side and lower sides.	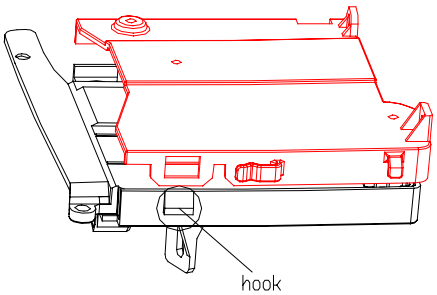	
4	Remove the running gear.	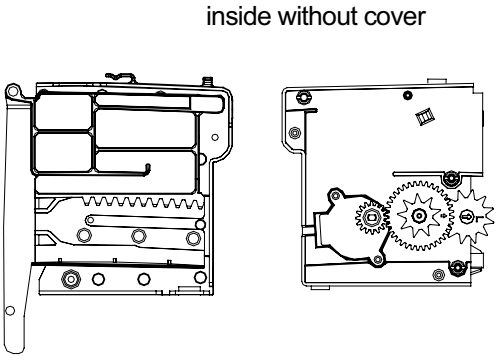	■ Be careful so as not to lose the rollers and the cogs. ■ When you demand small parts like cogs and rollers, order a set of assembly.

Все каталоги и инструкции здесь: https://splitsystema48.ru/instrukcii-po-ekspluatacii-kondicionerov.html

9.4 Removal of Horizontal Blade

Procedure

⚠ Warning Be sure to wait 10 minutes or more after turning off all power supplies before disassembling work.

Step		Procedure	Points
1. Remove the horizontal blade.			■ The horizontal blade is single.
1	Release the center pivot.	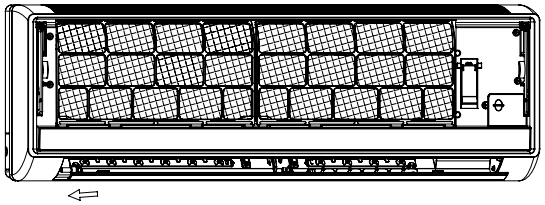 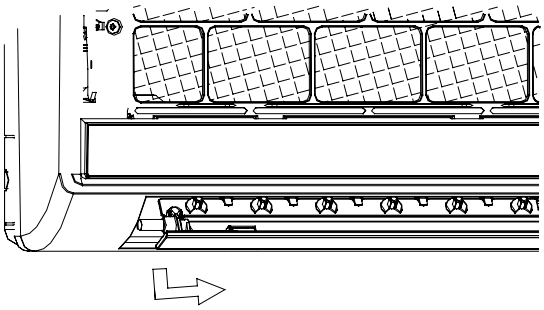 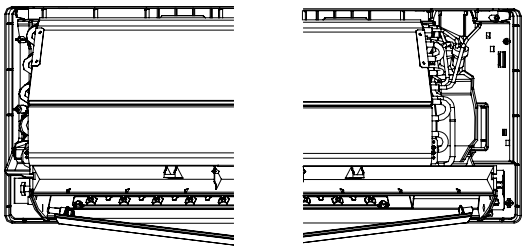	■ Installation procedure 1. Since key pattern hook is provided, rotate the blade and fit it to the left pivot first. 2. Fit the blade to the right pivot. 3. Fit the blade to the center pivot.
2	Bend the horizontal blade slightly and remove it.	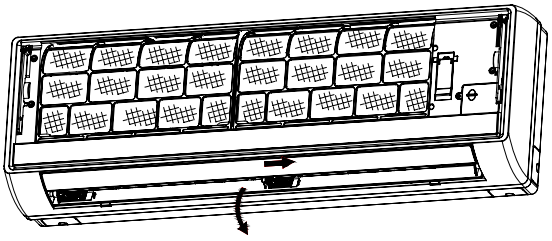	

Все каталоги и инструкции здесь: https://splitsystema48.ru/instrukcii-po-ekspluatacii-kondicionerov.html

Step	Procedure		Points
2. Remove the swing motor.			■ The swing motor for horizontal blade is on the left side.
1	Pull out and remove the swing motor connector.	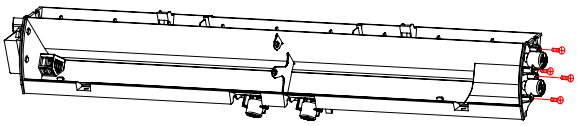	
2	Loosen the screw.	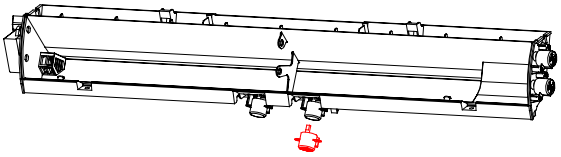	
3	Pull toward left and remove the swing motor.	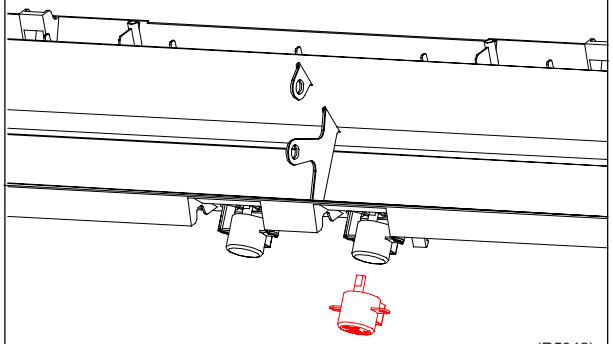 (R5042)	■ The axis has a keyhole.

Все каталоги и инструкции здесь: https://splitsystema48.ru/instrukcii-po-ekspluatacii-kondicionerov.html

9.5 Removal of Drain pan

Procedure

Warning Be sure to wait 10 minutes or more after turning off all power supplies before disassembling work.

Step	Procedure		Points
	■ Remove the front grille. ■ Remove the assembly of the reduction motor.	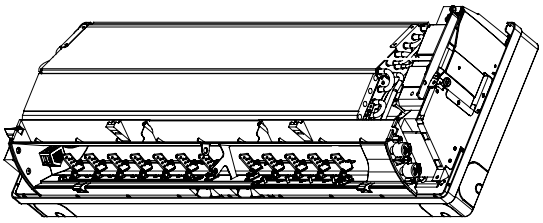	
	1. Remove the Drain pan.		
1	Loosen the marked screws under the screw covers	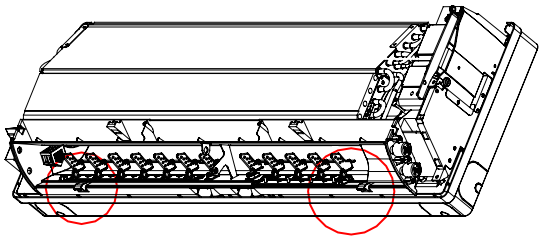	
		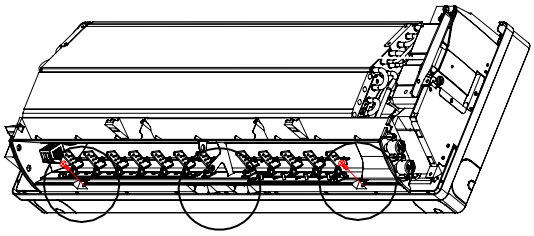	
2	Lift up the lower part of the grille to release the hook on the upper backside.	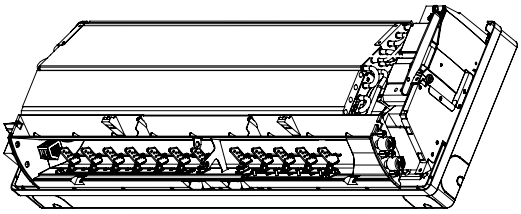	
	Rotate the upper part of the grille to release the hook on the lower back-side. Pull out the grille.	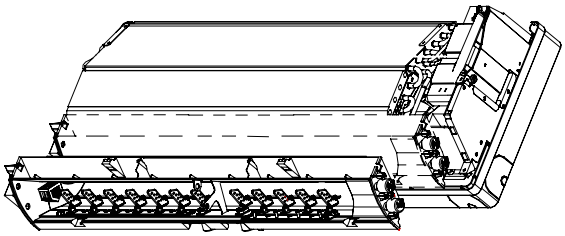	

Все каталоги и инструкции здесь: https://splitsystema48.ru/instrukcii-po-ekspluatacii-kondicionerov.html

9.6 Removal of Vertical Blades and Swing Motor

Procedure

Warning Be sure to wait 10 minutes or more after turning off all power supplies before disassembling work.

Step	Procedure	Points
■ Remove the assembly of the outlet grille.		
1. Remove the vertical blades.		
1	Push the hooks on the back of the vertical blades and remove.	

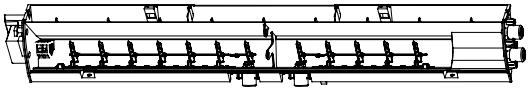

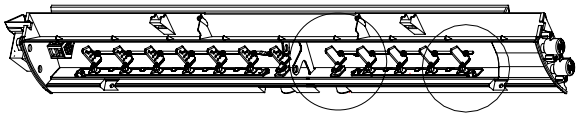

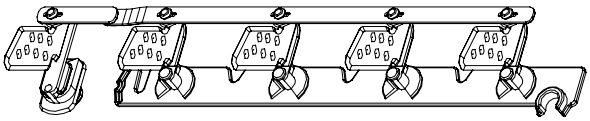

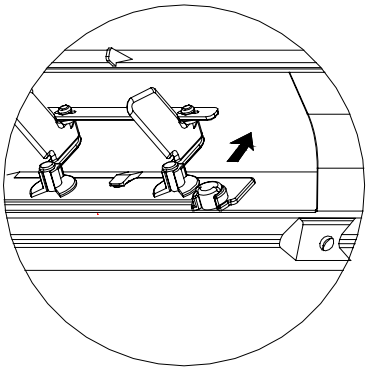

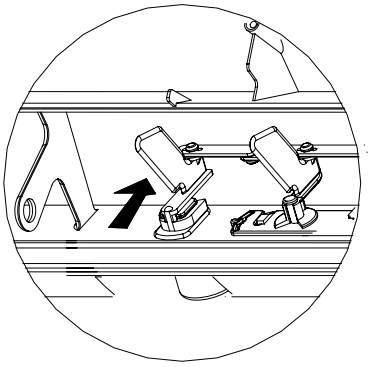

Все каталоги и инструкции здесь: https://splitsystema48.ru/instrukcii-po-ekspluatacii-kondicionerov.html

Step	Procedure		Points
2	Removal of the vertical blades	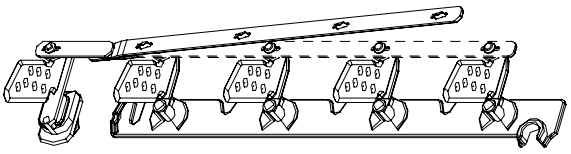 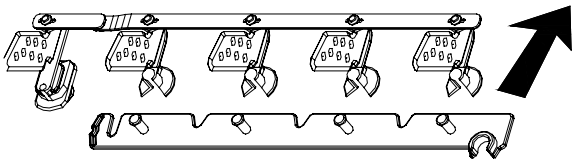	
3	Removal of the blade motor.	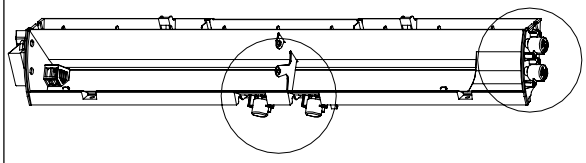 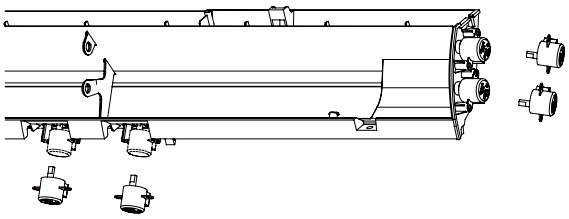	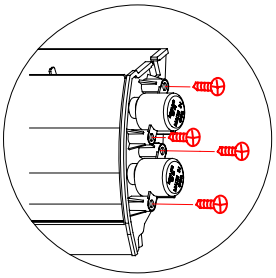 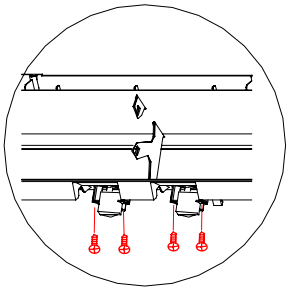

Все каталоги и инструкции здесь: https://splitsystema48.ru/instrukcii-po-ekspluatacii-kondicionerov.html

9.7 Removal of Electrical Box

Procedure

Warning Be sure to wait 10 minutes or more after turning off all power supplies before disassembling work.

Step	Procedure	Points
■ Remove the front grille.		■ Discharge the static electricity from your body before touching the electrical parts like signal receiver PCB. It may cause malfunction of PCB.
1. Remove the electrical box.		
1	Loosen the screw of the drip proof plate.	
2	Lift and remove the drip proof plate.	■ When assembling, insert the left hook of the drip proof plate into the hem plate of the heat exchanger.

Все каталоги и инструкции здесь: https://splitsystema48.ru/instrukcii-po-ekspluatacii-kondicionerov.html

Step	Procedure		Points
3	Open the cover of the electrical box and loosen connecting wires	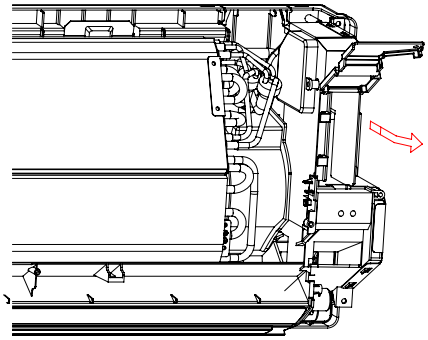	
4	Tilt the front part of the electrical box to the right slightly and pull it out.	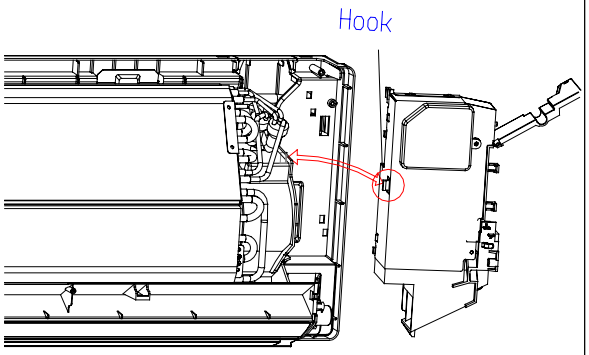	

Все каталоги и инструкции здесь: https://splitsystema48.ru/instrukcii-po-ekspluatacii-kondicionerov.html

9.8 Removal of Heat Exchanger

Procedure

Warning Be sure to wait 10 minutes or more after turning off all power supplies before disassembling work.

Step	Procedure		Points
			■ You can detach the indoor unit without removing the assembly of the outlet grille.
1	Loosen the screws fixed to the installation plate.	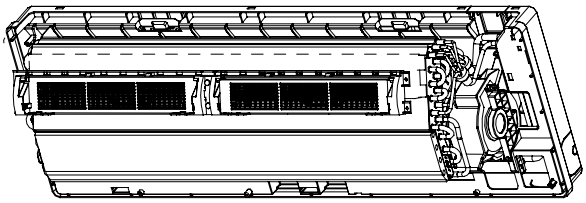	Caution If gas leaks, repair the spot of leaking, then collect all refrigerant from the unit. After conducting vacuum drying, recharge proper amount of refrigerant.
2	Loosen the marked hooks	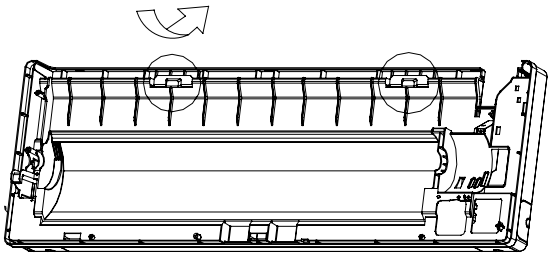	Caution Do not contaminate any gas (including air) other than the specified refrigerant (R410A), into refrigerant cycle. (Contaminating of air or other gas causes abnormal high pressure in refrigerating cycle, and this results in pipe breakage or personal injuries.)
3	Loosen the marked screws and remove mounting plate	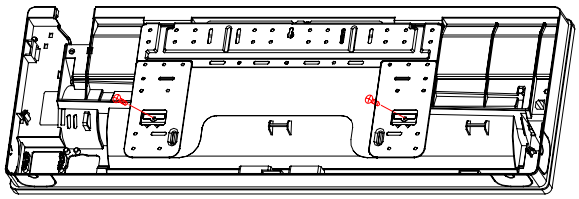 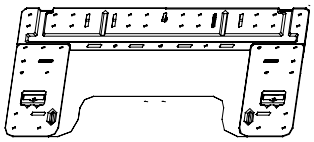 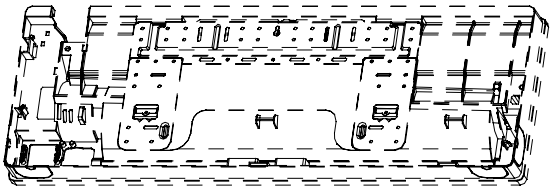	■ Pay attention so that the residual water in the drain will not make the floor wet. ■ In case that a drain hose is buried inside a wall, remove it after the drain hose in the wall is pulled out. ■ Use two wrenches to disconnect pipes. ■ When disconnecting pipes, cover every nozzle with caps so as not to let dust and moisture in.

Все каталоги и инструкции здесь: https://splitsystema48.ru/instrukcii-po-ekspluatacii-kondicionerov.html

Step	Procedure	Points
1	Release the hooks	
2	Release the hook from the back side. Lift up the lower part of the fixture plate and remove it.	
6	Remove the heat exchanger	

Все каталоги и инструкции здесь: https://splitsystema48.ru/instrukcii-po-ekspluatacii-kondicionerov.html

9.9 Removal of Fan and Fan Motor

Procedure

Warning Be sure to wait 10 minutes or more after turning off all power supplies before disassembling work.

Step	Procedure	Points
1. Remove the right side plate.		
1	Loosen the 2 screws. 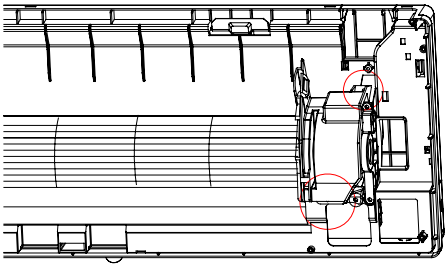	
2	Remove the right side plate. 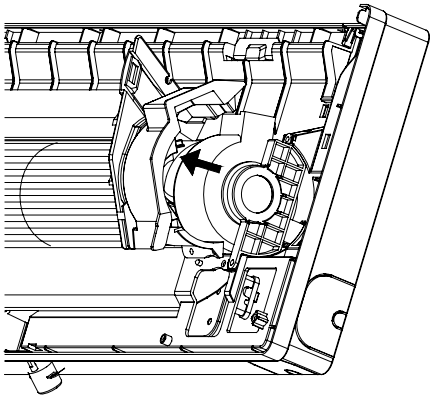 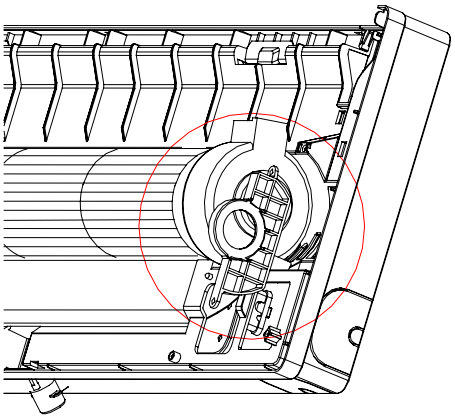 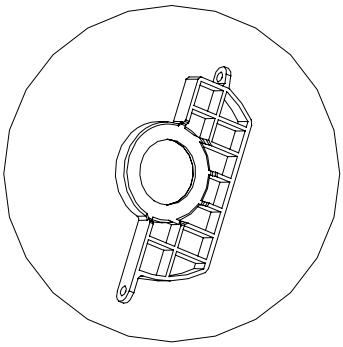	

Все каталоги и инструкции здесь: https://splitsystema48.ru/instrukcii-po-ekspluatacii-kondicionerov.html

Step	Procedure	Points
3. Remove the bearing.		
1	Lift up the right part of the fan rotor and motor, and slide them to the rightward to remove. 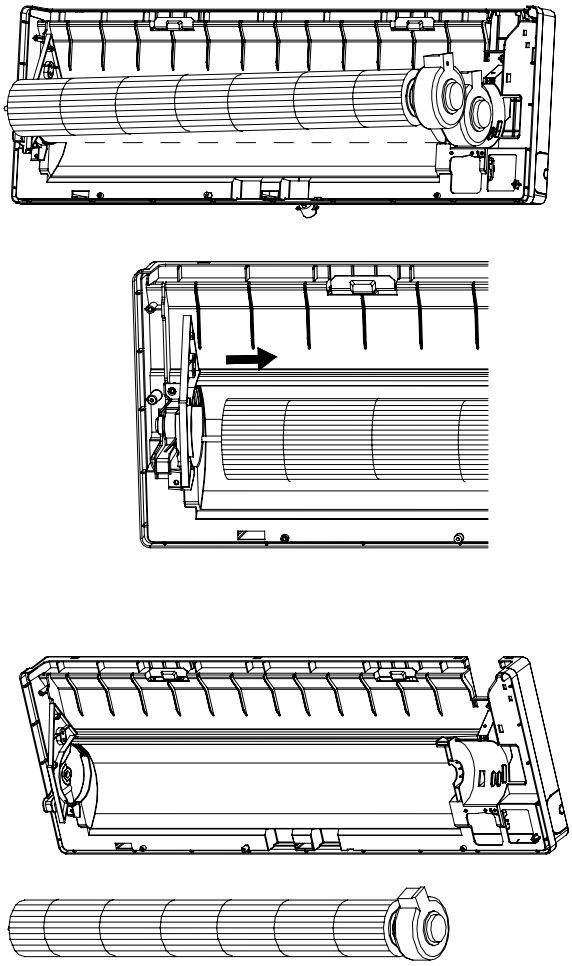	

Все каталоги и инструкции здесь:

Step	Procedure		Points
2	Loosen the marked screws and remove the left plate	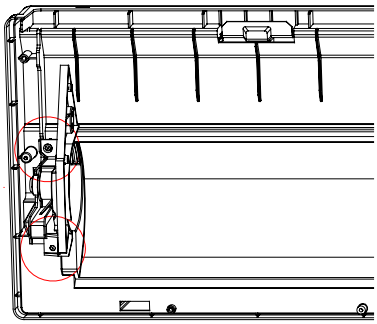 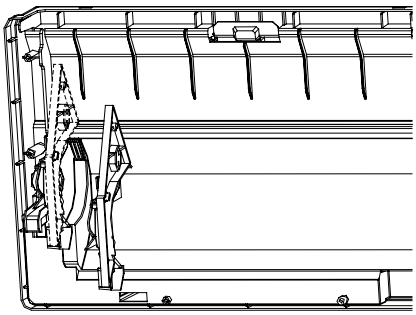	
3	Remove the bearing	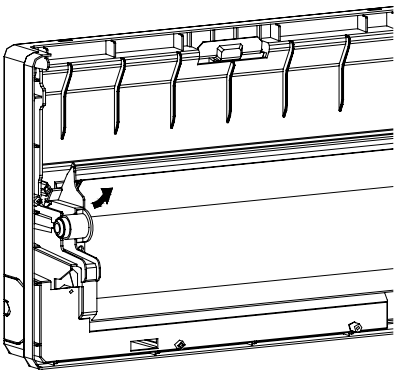 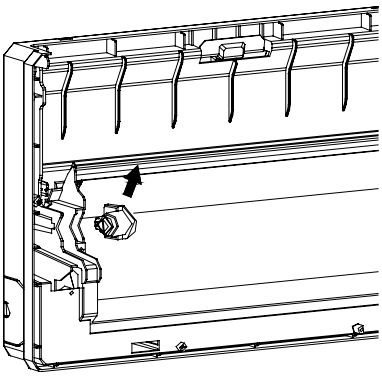	

Все каталоги и инструкции здесь: https://splitsystema48.ru/instrukcii-po-ekspluatacii-kondicionerov.html

Outdoor unit

9.10 Removal of Outdoor panel

Procedure

Warning Be sure to wait 10 minutes or more after turning off all power supplies before disassembling work.

Step	Procedure		Points
1. Features			
1	Loosen the screw of the stop valve cover. Pull down the stop valve cover and remove it.	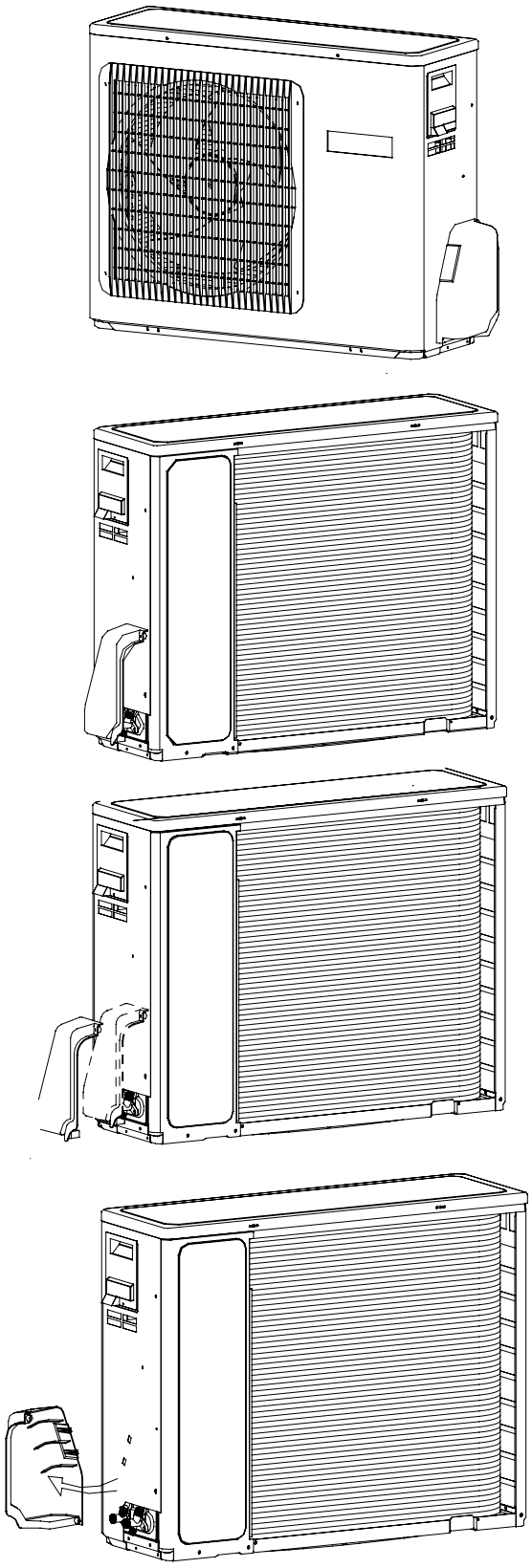	■ Be careful not to cut your finger by the fins of the heat exchanger. ■ The stop valve cover is united with the shelter. ■ When assembling, make sure to fit the 5 hooks.

Все каталоги и инструкции здесь: https://splitsystema48.ru/instrukcii-po-ekspluatacii-kondicionerov.html

Step	Procedure	Points
2. Remove the panels.		
1	Loosen the service cover screw and remove the service cover.	
2	Loosen the 4 screws and lift the top panel	

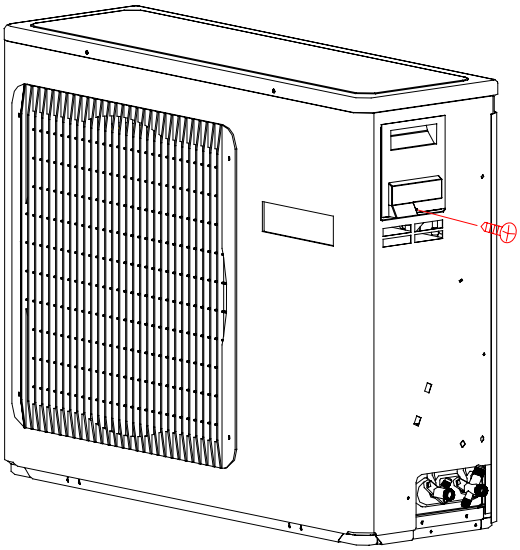

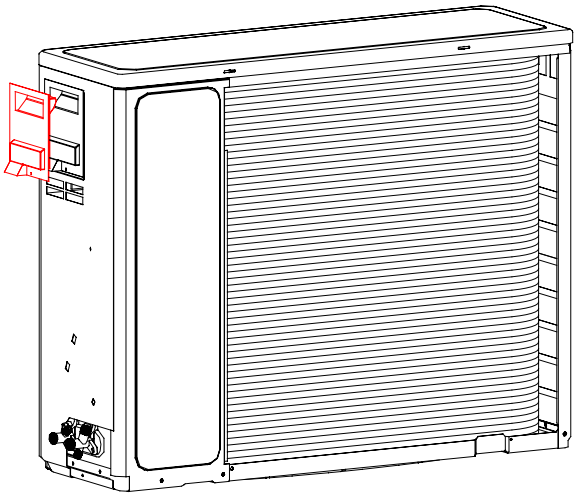

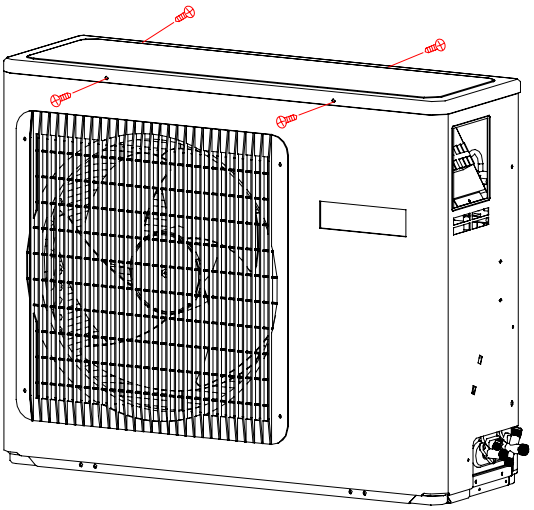

Все каталоги и инструкции здесь: https://splitsystema48.ru/instrukcii-po-ekspluatacii-kondicionerov.html

Step	Procedure	Points
3	Loosen the screws of the panel. 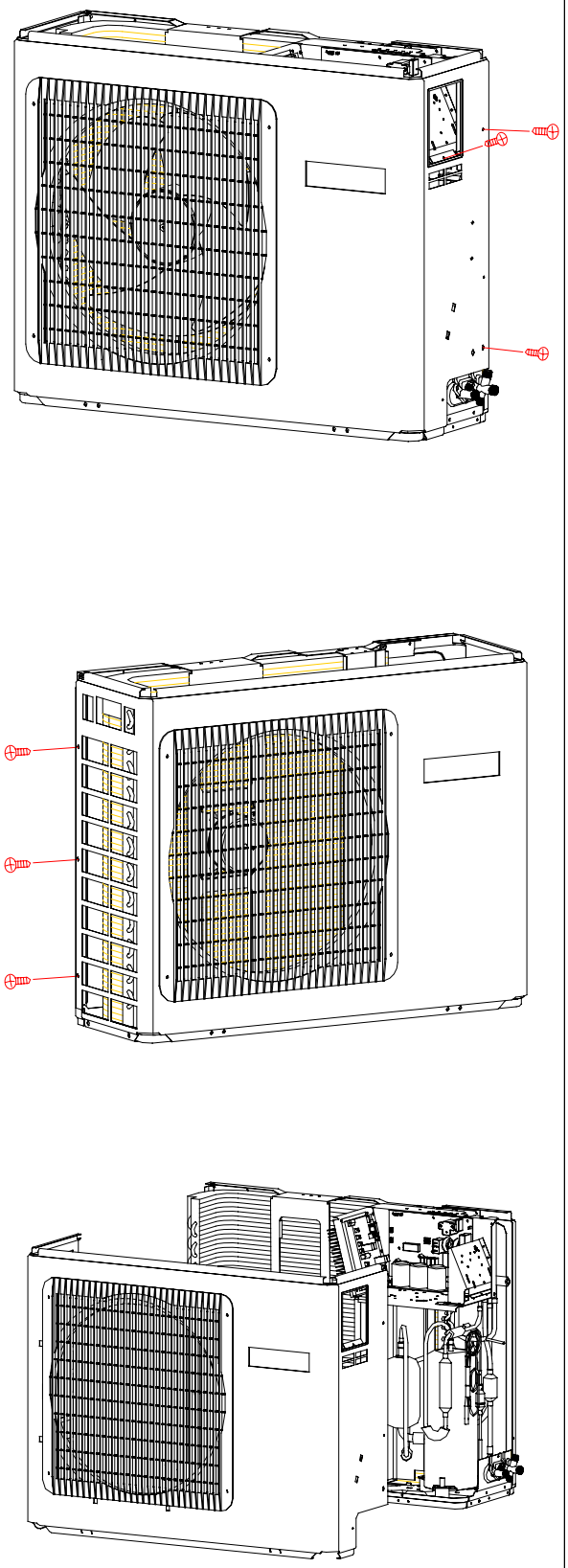	

Все каталоги и инструкции здесь: https://splitsystema48.ru/instrukcii-po-ekspluatacii-kondicionerov.html

Step	Procedure		Points
4	Pull and remove the front panel.	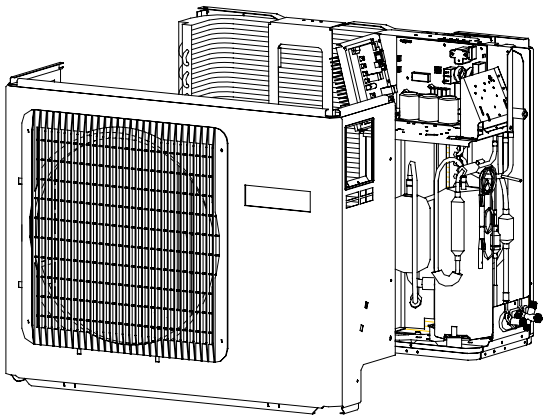	
3.	Remove the outlet grille		
1	Unscrew the four marked screws	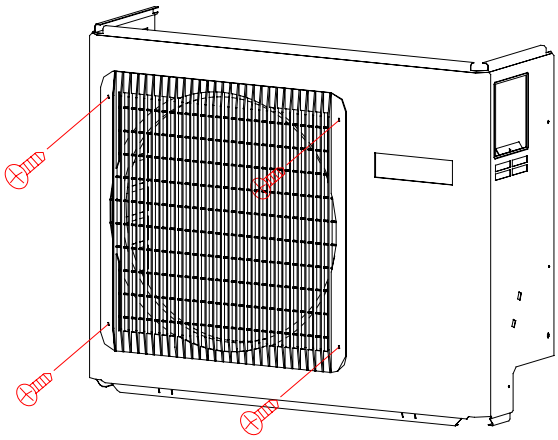	
2	Push the eight hooks on the inside back of front panel,then pull the outlet grille off.	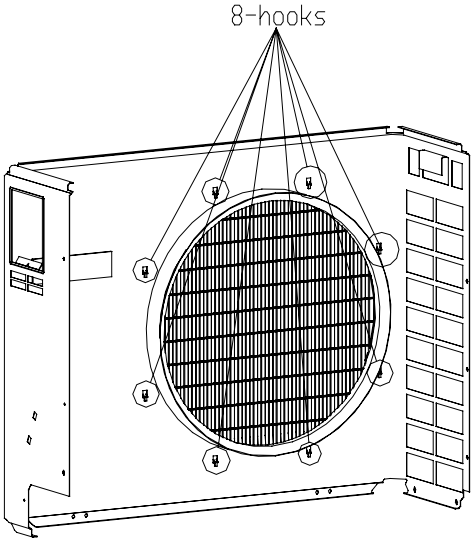	

Все каталоги и инструкции здесь: https://splitsystema48.ru/instrukcii-po-ekspluatacii-kondicionerov.html

9.11 Removal of Electrical Box

Procedure

Warning Be sure to wait 10 minutes or more after turning off all power supplies before disassembling work.

Step	Procedure		Points
1	Remove the fixing screws Then lift the electrical box	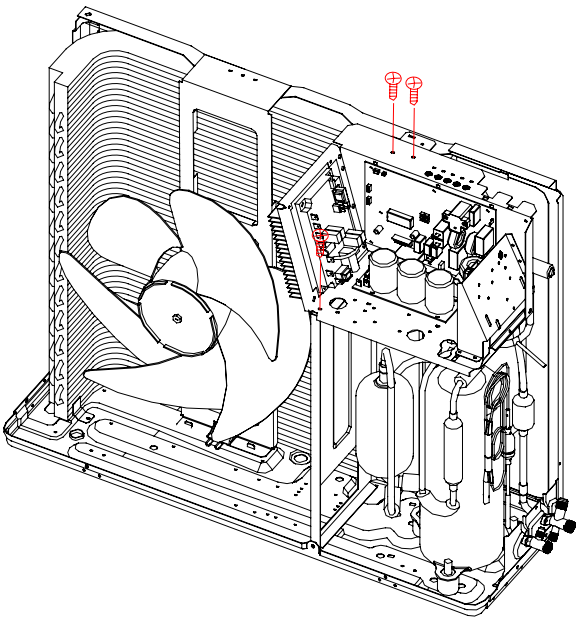 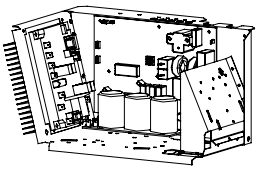 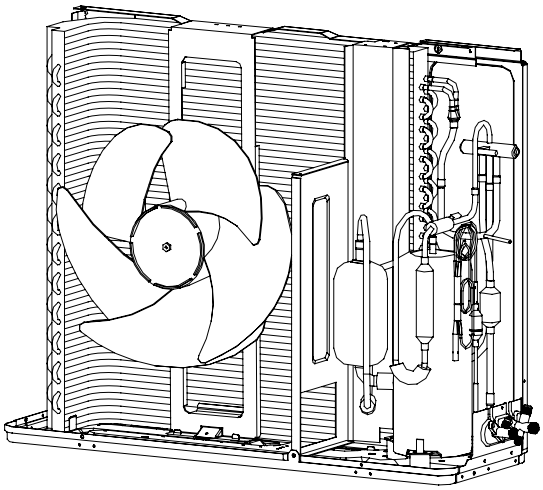	

Все каталоги и инструкции здесь: https://splitsystema48.ru/instrukcii-po-ekspluatacii-kondicionerov.html

9.12 Removal of Fan and Fan Motor

Procedure

Warning Be sure to wait 10 minutes or more after turning off all power supplies before disassembling work.

Step	Procedure		Points
1	Loosen the fixing screw and remove the fan	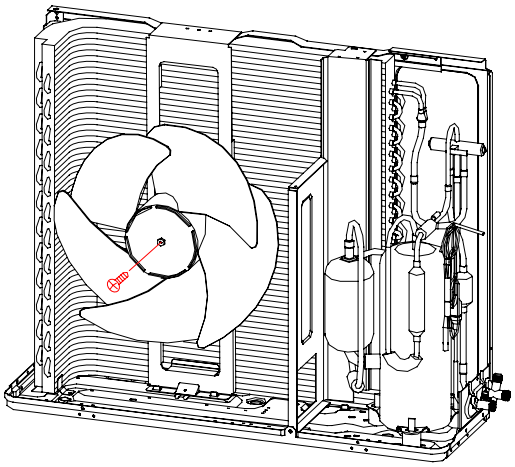 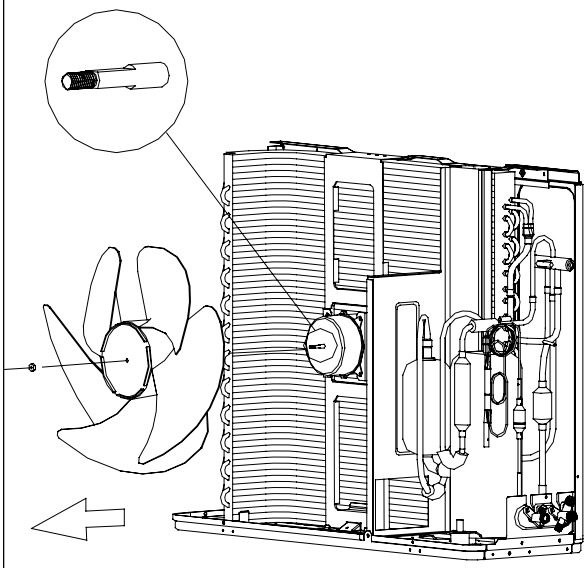	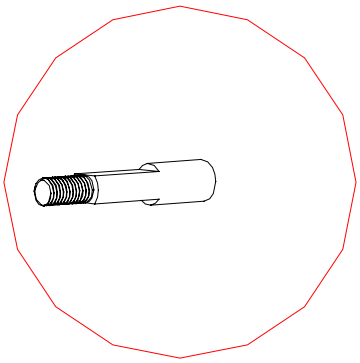 ■ Put the lead wire through the back of the motor when assembling. (so as not to be entangled with the propeller fan)

Все каталоги и инструкции здесь: https://splitsystema48.ru/instrukcii-po-ekspluatacii-kondicionerov.html

9.13 Removal of fan motor bracket and partition

Procedure

Warning Be sure to wait 10 minutes or mo
before disassembling work.

Step	Procedure		Points
1	Loosen the fixing screws and lift the fan motor bracket.	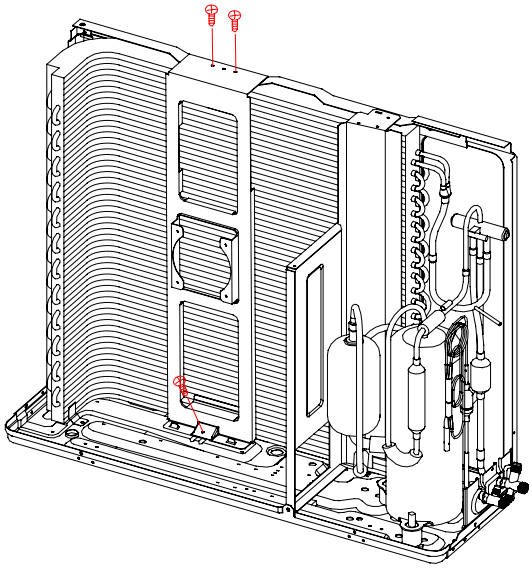 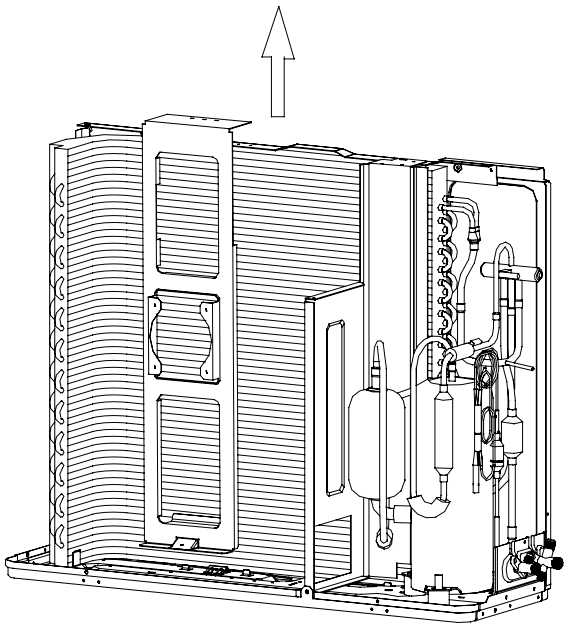	

Все каталоги и инструкции здесь: https://splitsystema48.ru/instrukcii-po-ekspluatacii-kondicionerov.html

Step	Procedure		Points
3	Loosen the 2 screws	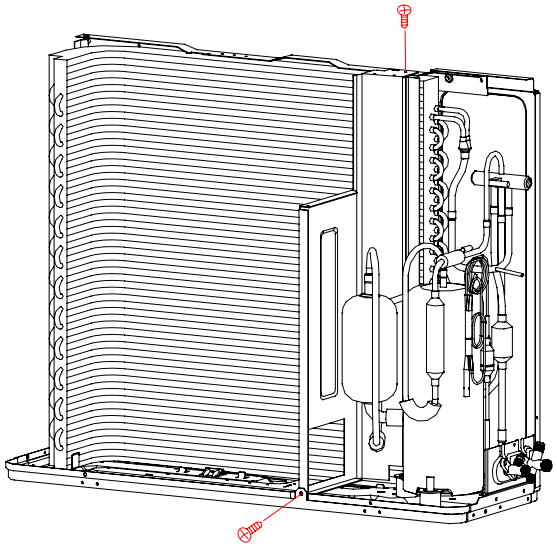	
4	The partition plate has a hook on the lower side.Lift and pull the partition plate to remove.	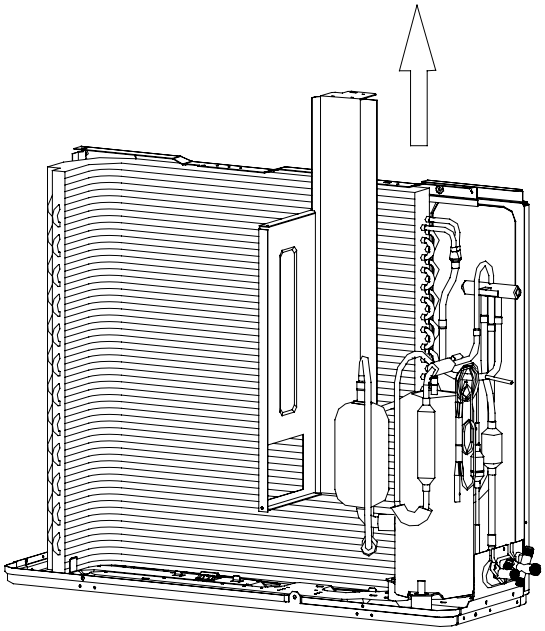	■ When assembling ,fit the lower hook into the bottom frame .
5	Loosen the marked fixing screws	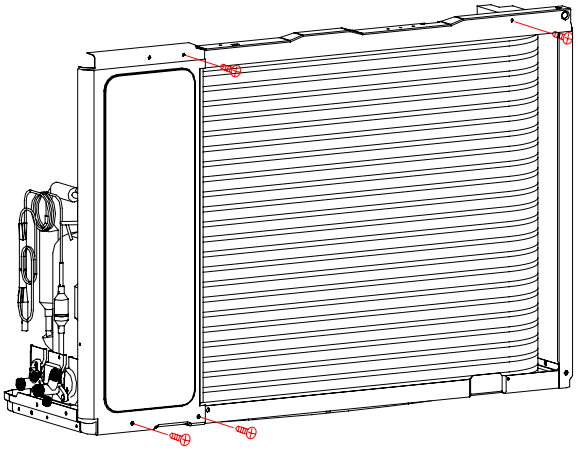	

Все каталоги и инструкции здесь: https://splitsystema48.ru/instrukcii-po-ekspluatacii-kondicionerov.html

9.14 Removal of compressor and heat exchanger

Procedure

Warning Be sure to wait 10 minutes or more after tu
before disassembling work.

Step	Procedure		Points
1	Loosen the marked screw .	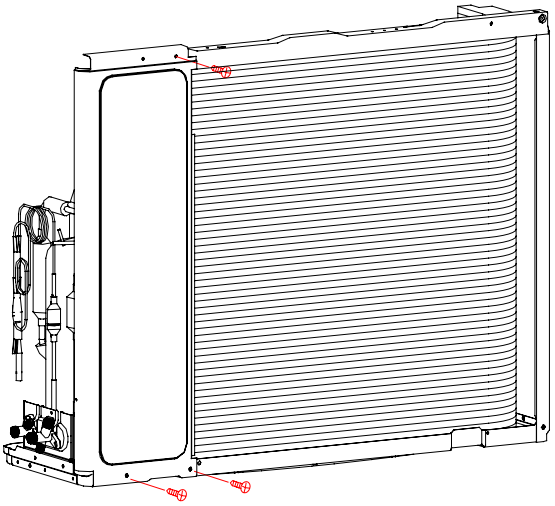	
2	Cut down the conecting pipe and pull out the compressor and remove the valve bracket .	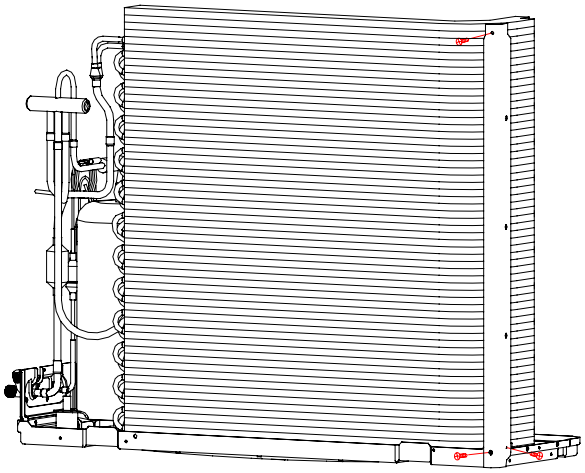 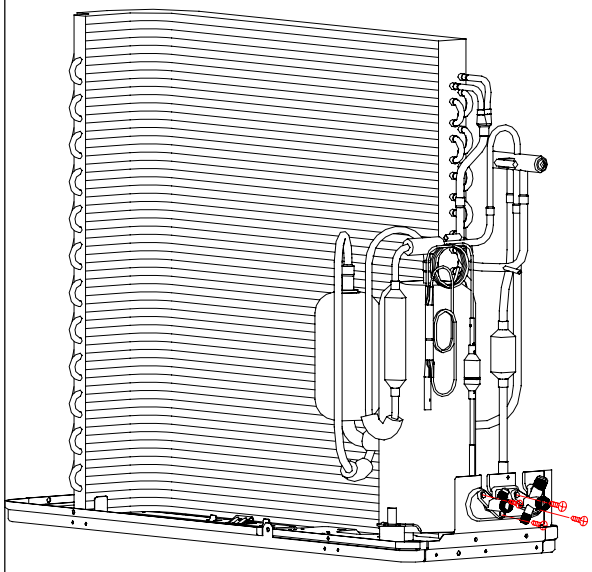	

Все каталоги и инструкции здесь: https://splitsystema48.ru/instrukcii-po-ekspluatacii-kondicionerov.html

Step	Procedure		Points
3	Loosen the marked fixing screw .	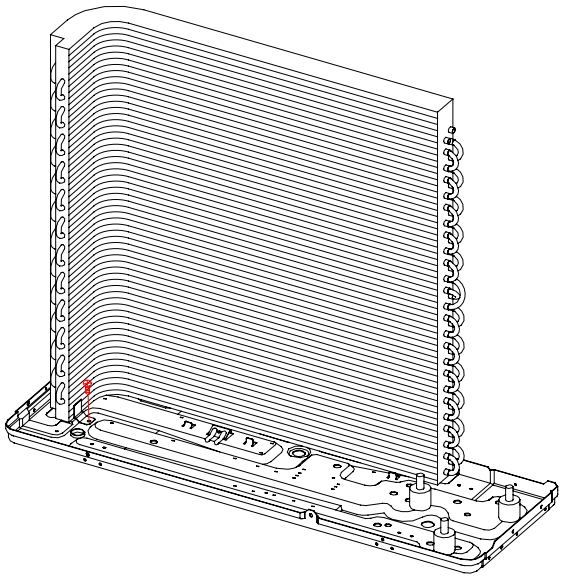	
4	Loosen the fixing hook and remove the heat exchanger .	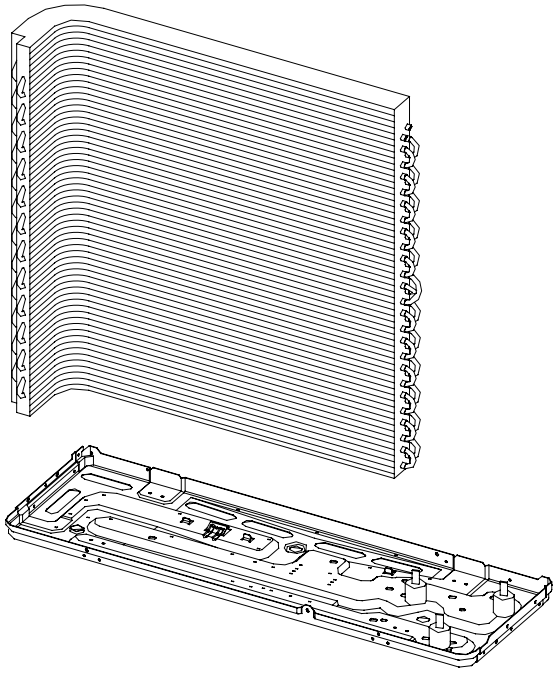	

Все каталоги и инструкции здесь: https://splitsystema48.ru/instrukcii-po-ekspluatacii-kondicionerov.html

10. Appendix

10.1 Piping Diagrams

Cooling

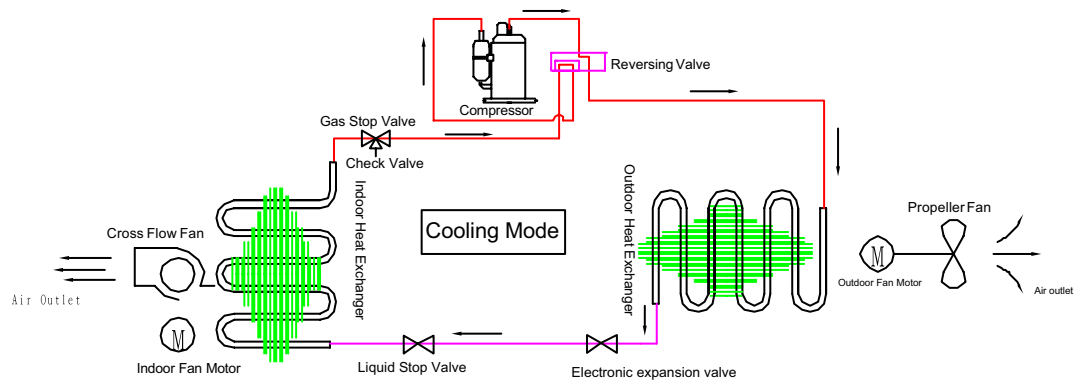

Heating

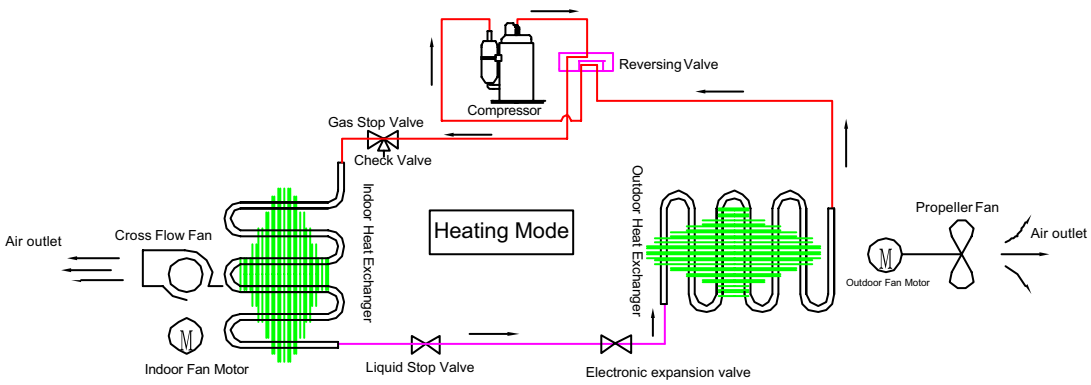

Все каталоги и инструкции здесь: https://splitsystema48.ru/instrukcii-po-ekspluatacii-kondicionerov.html

10.2 Wiring Diagrams

Indoor unit

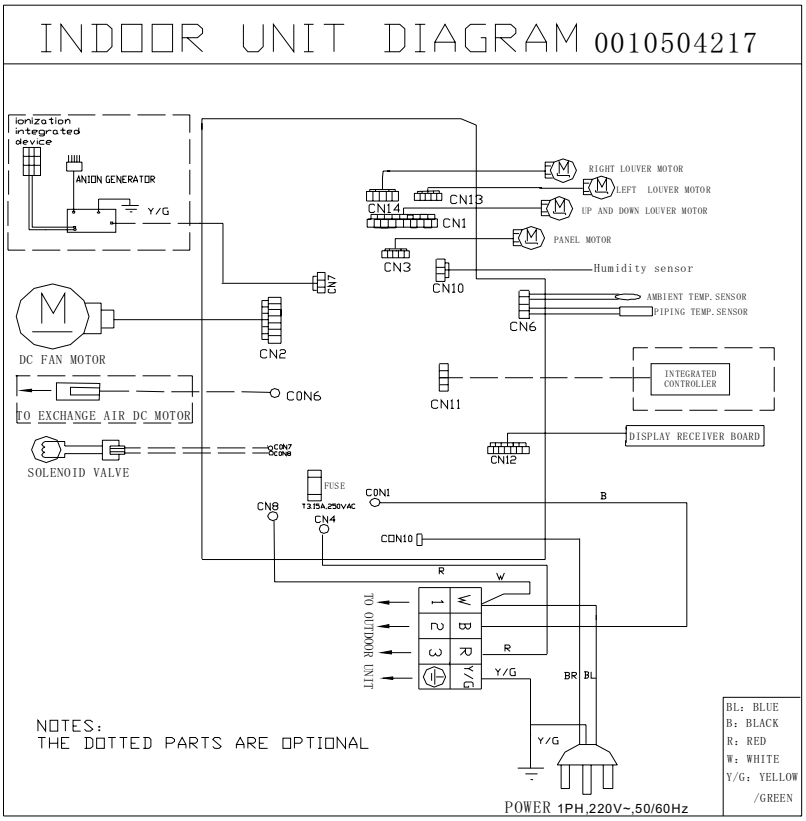

Outdoor unit

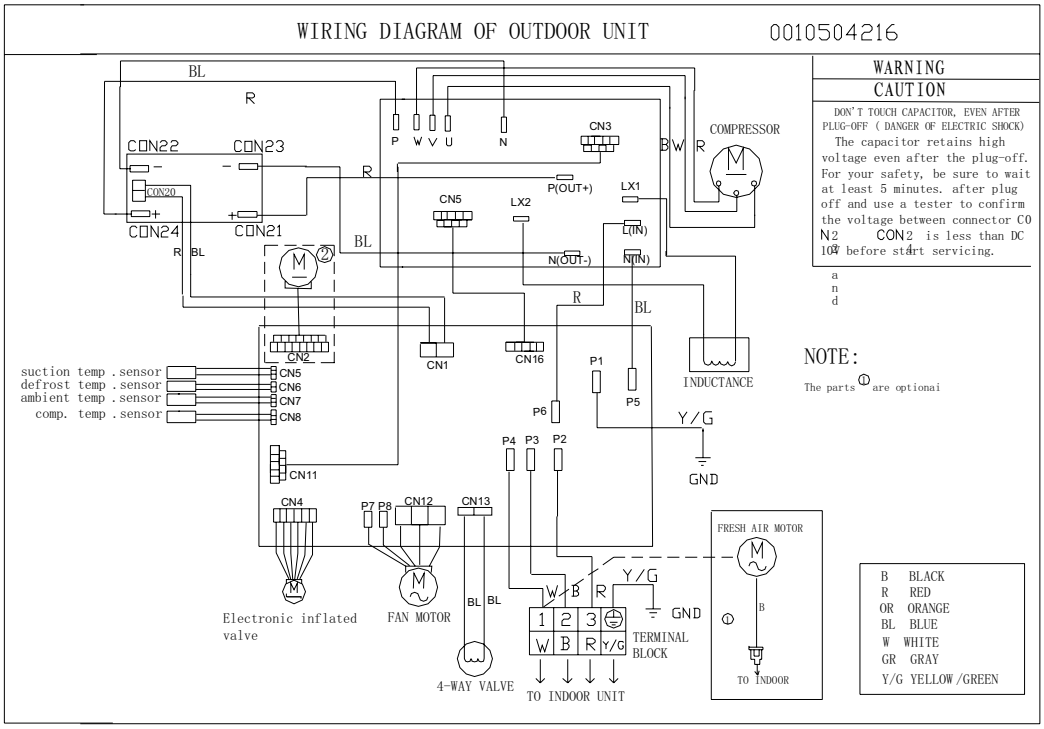

Все каталоги и инструкции здесь: https://splitsystema48.ru/instrukcii-po-ekspluatacii-kondicionerov.html

10.3 Circuit Diagrams

Indoor Unit

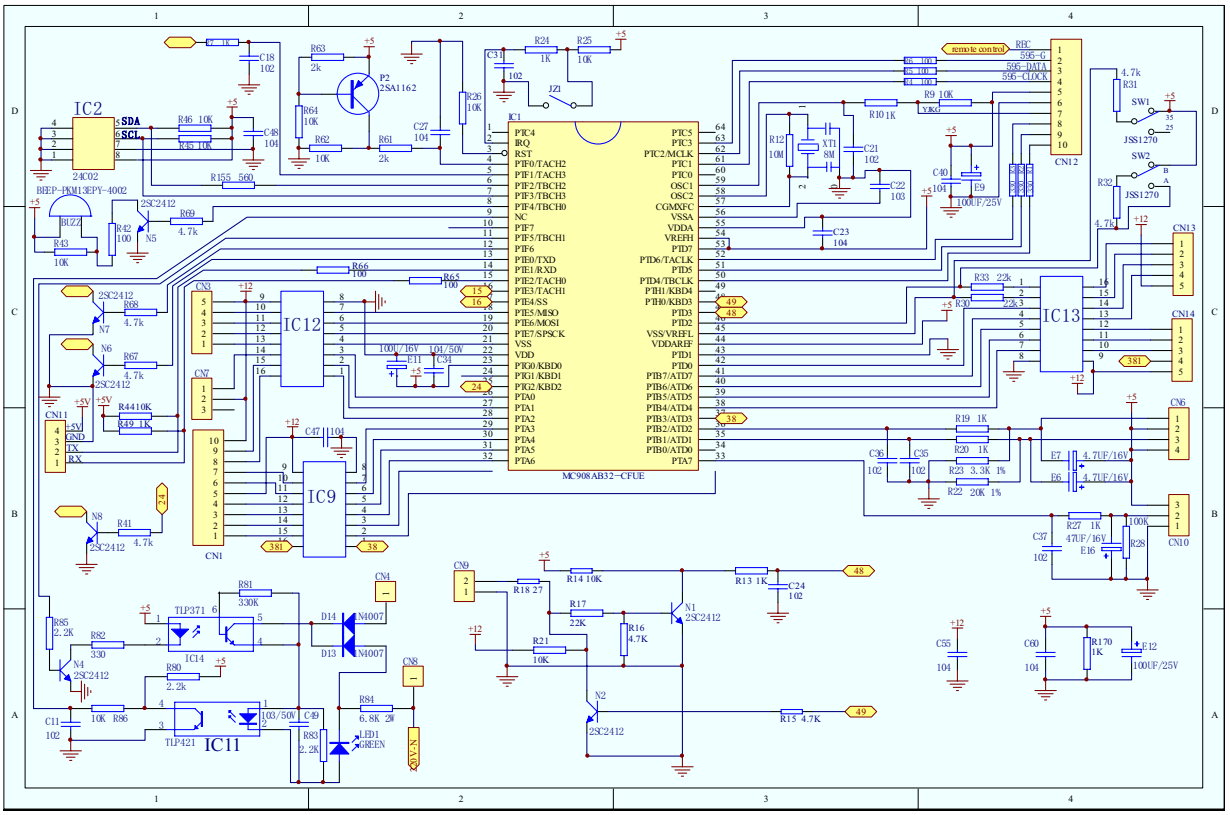

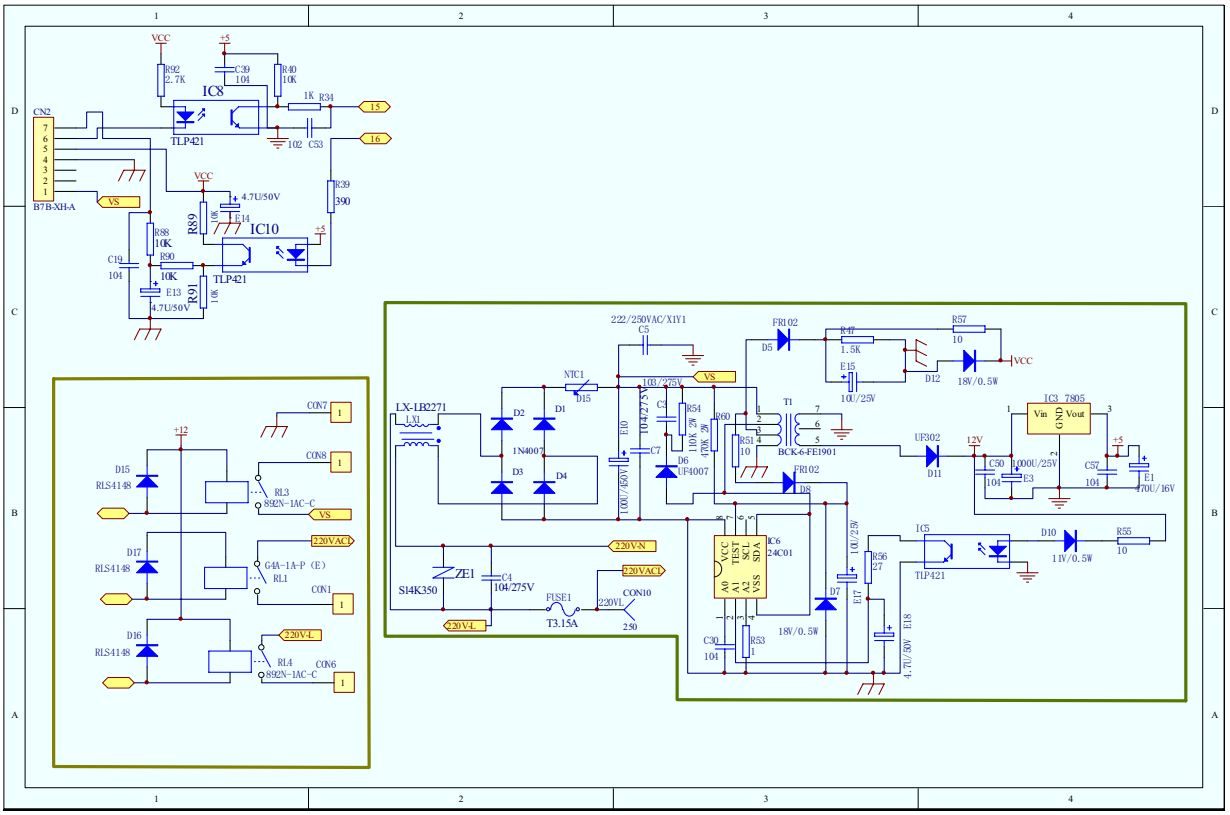

Все каталоги и инструкции здесь: https://splitsystema48.ru/instrukcii-po-ekspluatacii-kondicionerov.html

Outdoor Unit

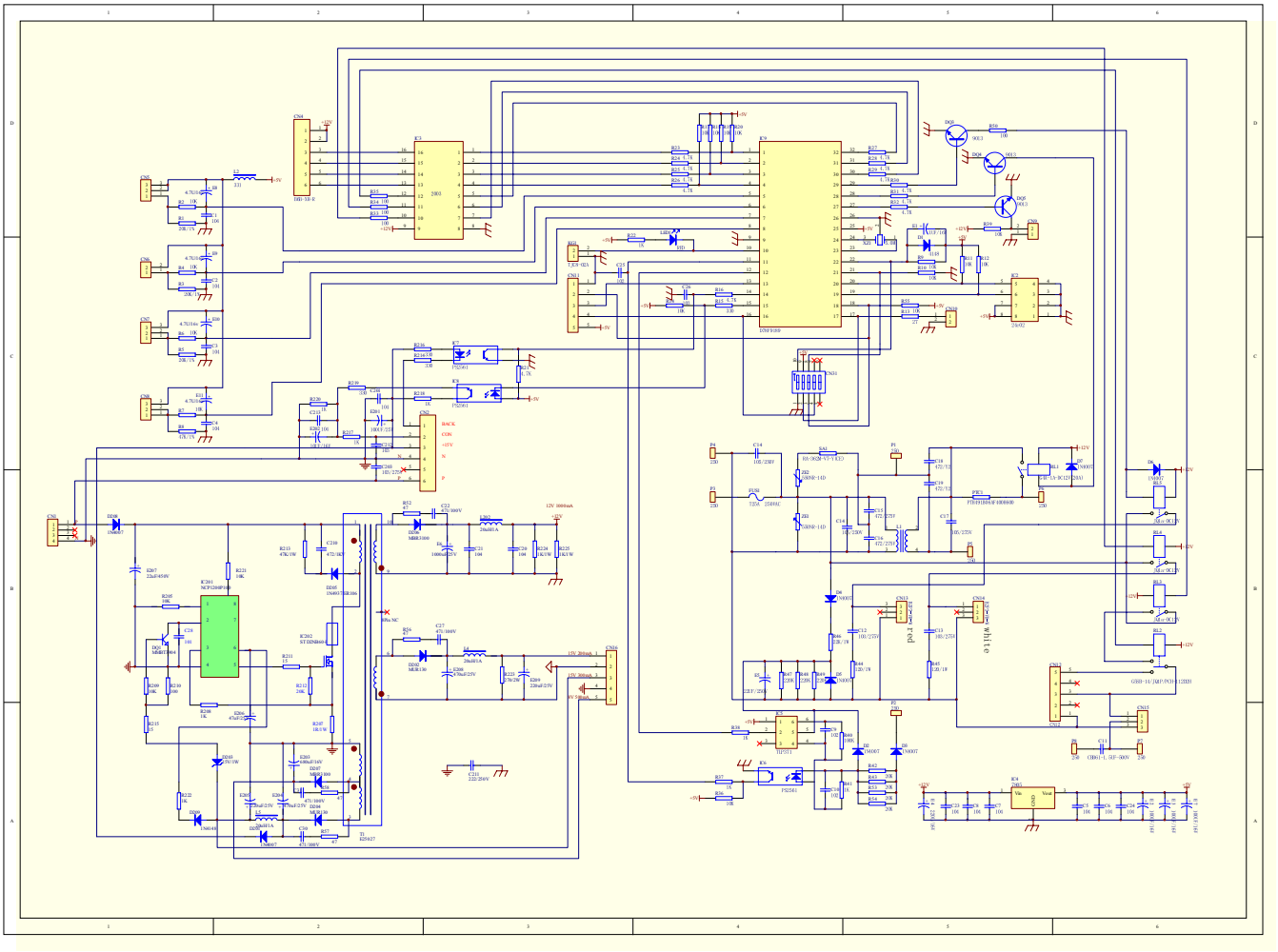

Все каталоги и инструкции здесь: https://splitsystema48.ru/instrukcii-po-ekspluatacii-kondicionerov.html

Sincere Forever

Haier Group

Haier Industrial Park, No.1, Haier Road

266101, Qingdao, China_

E-mail: hractech@haier.com

Tel: +86 532 87636957

Http://www.haier.com

Edited by: Guo Xia

Signed by: Zhang Lizhi

Approved by: Zhu Zhenxue

splitoff.ru

Большая библиотека технической документации

https://splitsystema48.ru/instrukcii-po-ekspluatacii-kondicionerov.html

каталоги, инструкции, сервисные мануалы, схемы.